INDEX

Drilling tool holder D14

Technical data

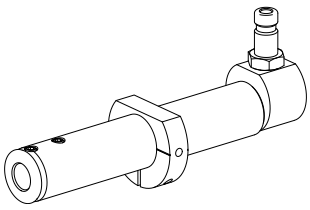

Drive	not live
Fixation MS	Clamping ring D28.5
Cooling	internal
Pressure	80 bar
Mounting	D14
X [mm]	–
Y [mm]	–
Z [mm]	–
INDEX TRAUB products	A100 • MS16-6 • MS22-6 • MS22-8 • MS24-6 • MS16-6 Plus

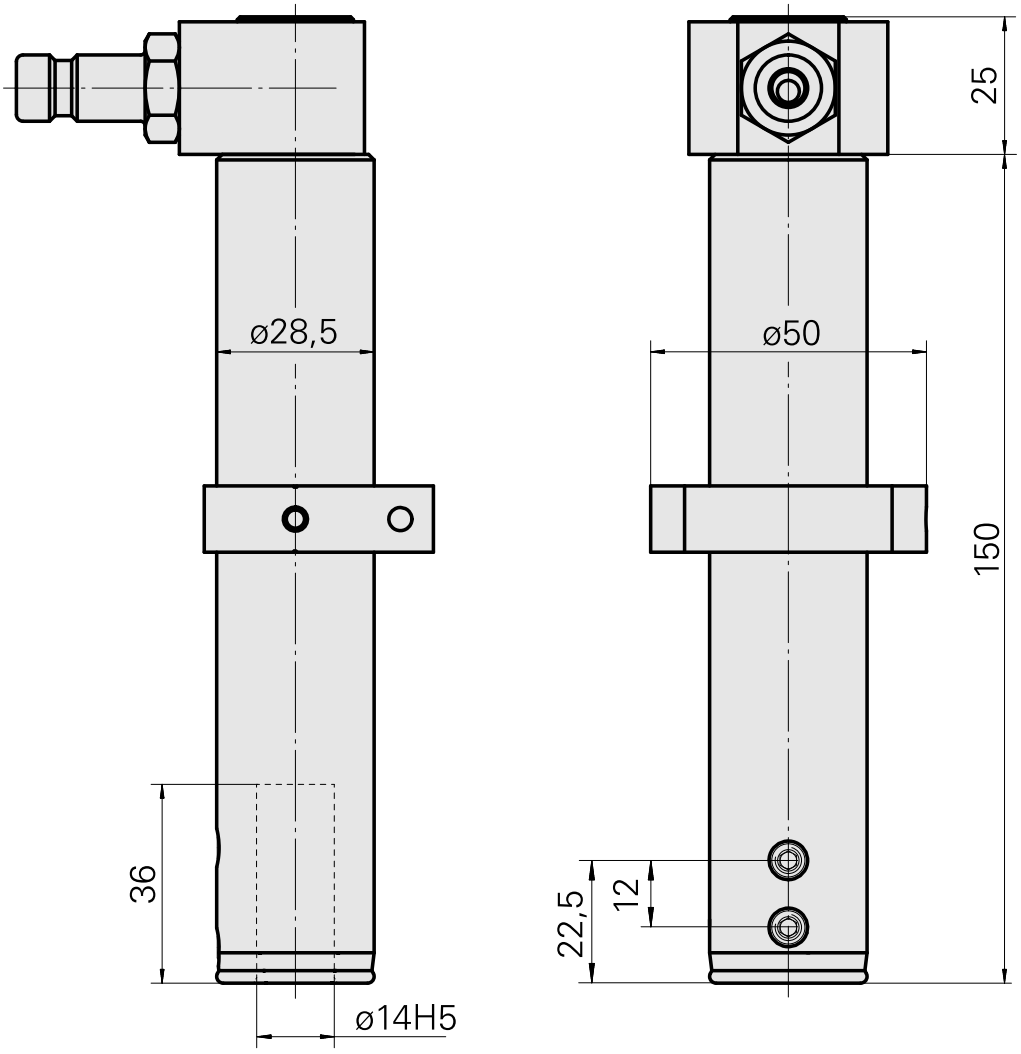

Documents

No downloads available for this product

Accessories

Optional accessories

Other accessories

QUICK COUPLING SP-006-0-WR513-11-2 Serie LP

Product ID : 10837142
Previous product ID : 474940.0112

QUICK DISCONNECT FITTING SP-006-1-WR013-11 Serie LP

Product ID : 10186287
Previous product ID : 474946.25