INDEX

Calibrating tool HSK 40 A D24 (0.94 ")

Technical data

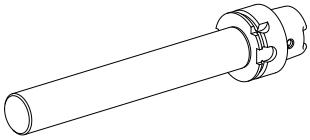

Shank HSK	HSK 40
Form HSK	A
Mounting	D24
X [mm]	180 (7.09")
INDEX TRAUB products	G160 • V100 • G200.2 • R200 • TNX65/42 • G220.3 • TNX220.3

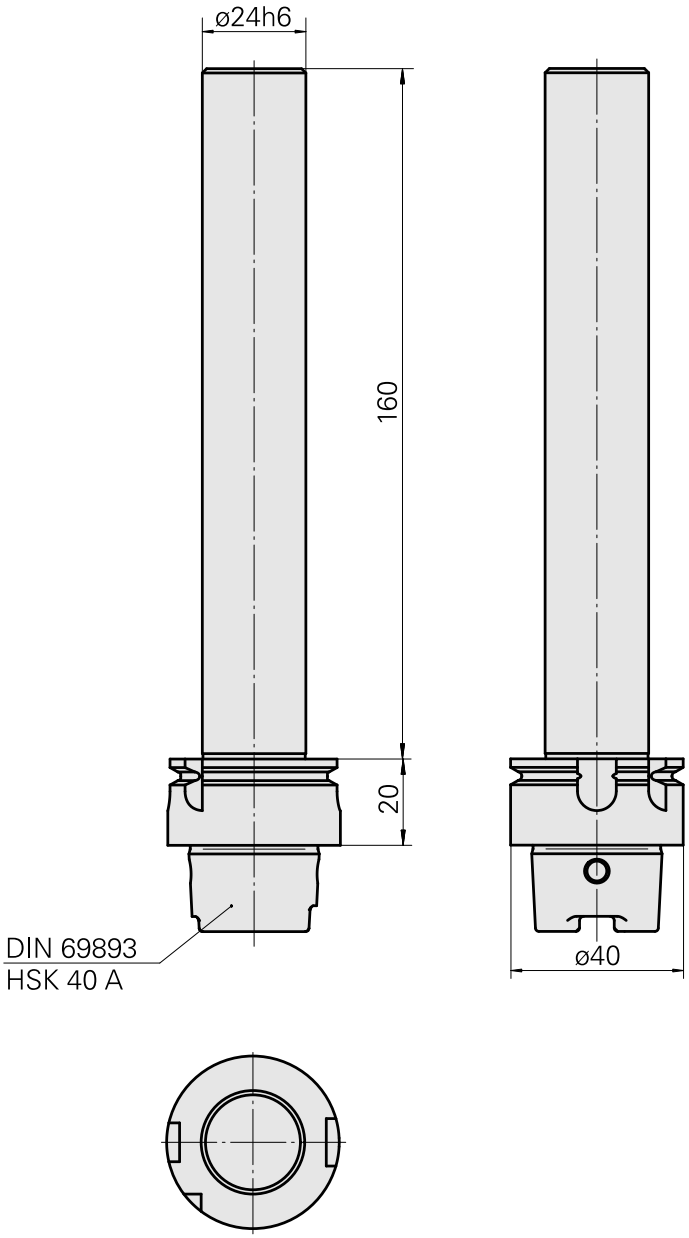

INDEX

Documents

No downloads available for this product