INDEX

Clamping nut

Technical data

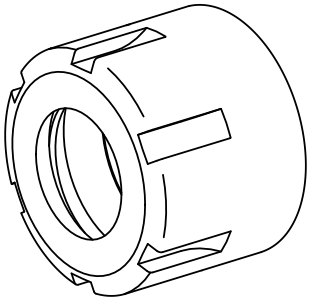

TH accessories category	Clamping nut
Mounting	ER20
Collet type	ER 20
Clamping nut type	Female thread diameter reduced

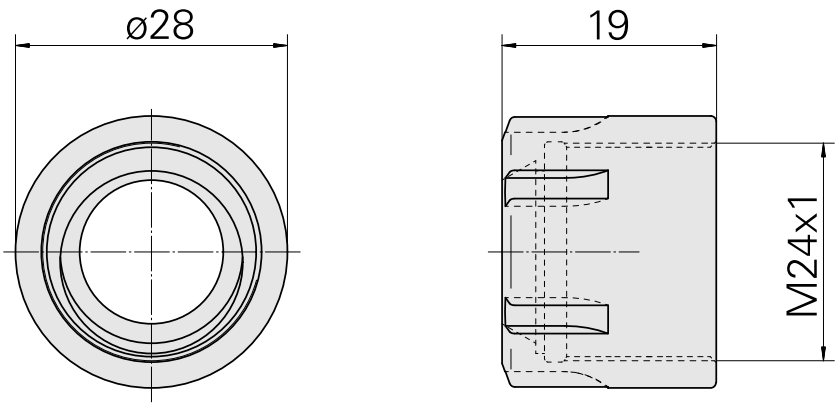

Documents

No downloads available for this product