INDEX

# Adaptor

## Technical data

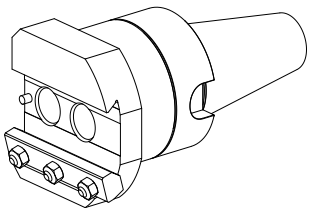

| | |
|---|---|
| **TH accessories category** | Adapter for presetting units |
| **Mounting** | SK50 |
| **Tool mounting** | Dovetail ABC |

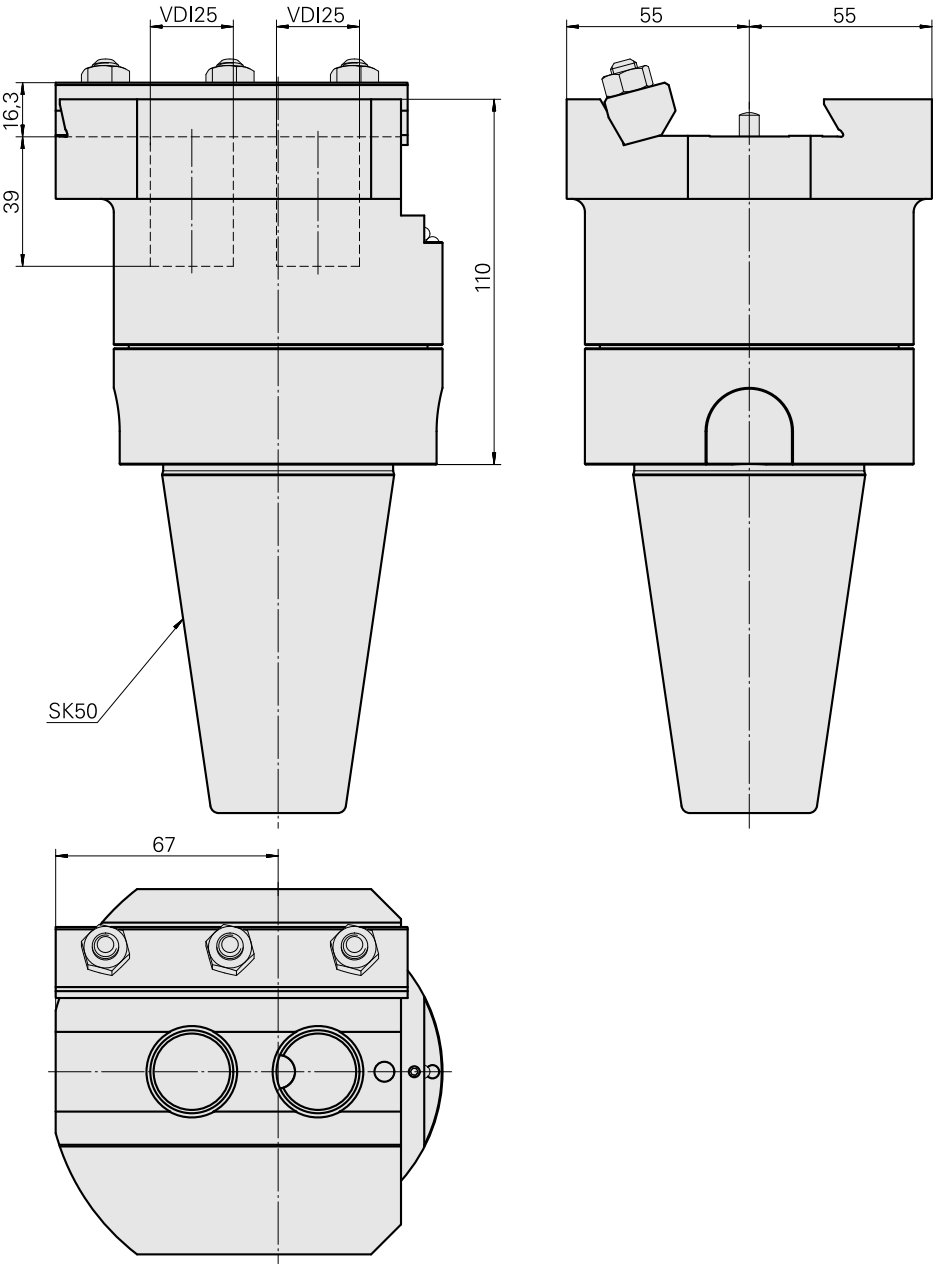

## Documents

No downloads available for this product