Guide bush T229 Ø=15,00

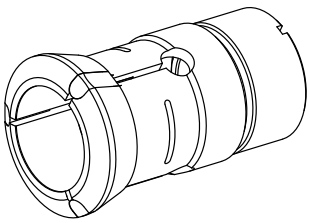

Technische Daten

Clamping device size	T229 deadlength
manufacturer product line	
Clamping type	with carbide insert
Nominal diameter (mm)	15 Millimeter
Clamping method	External clamping
Collet design	programmable (Axfix)
Collet version	Slots vulcanized (standard)
manufacturer product line	Schlenker

Hinweis

with bushing

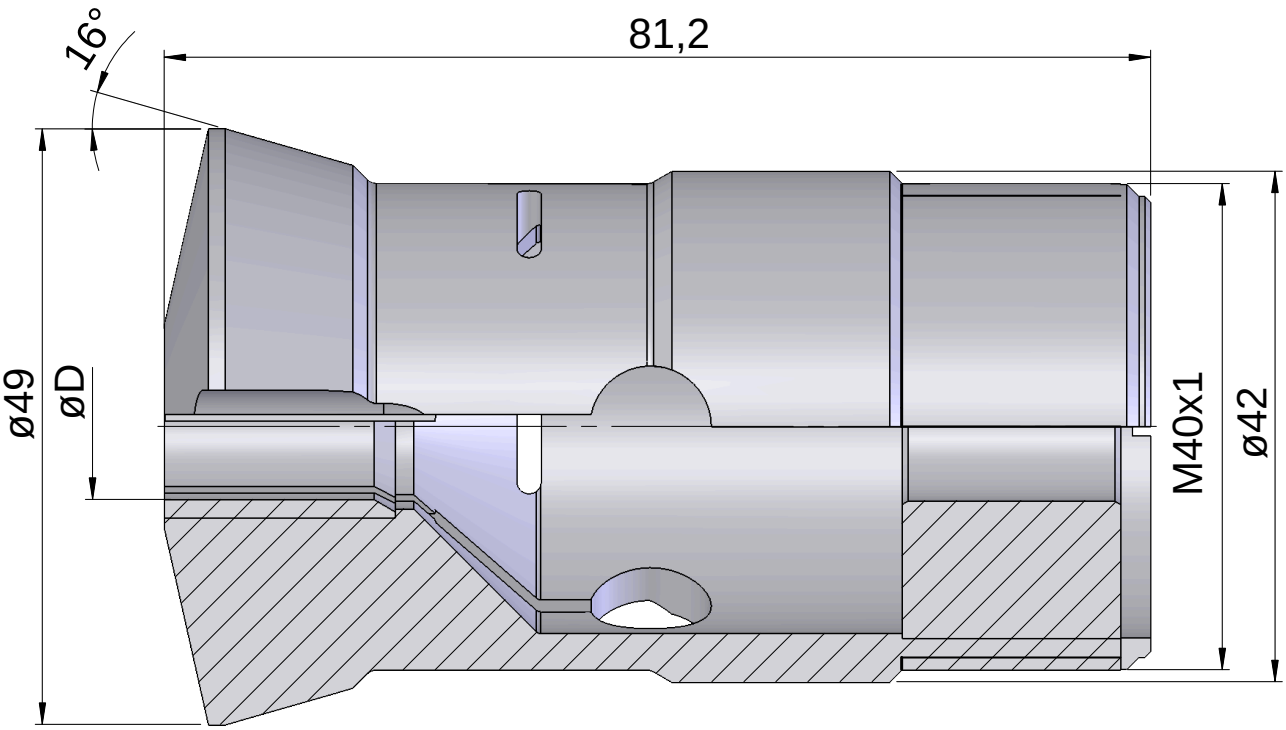
16°
81,2
ø49
øD
M40x1
ø42

Dokumente

Für dieses Produkt sind keine Downloads vorhanden