Basic holder MS16 drilling slide Hydraul

Technical data

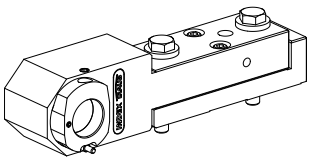

Slide system MS	MS16 drilling slide
Drive	not live
Fixation MS	W serration
Mounting	Hydraulic expan. Chuck D28.5
X [mm]	72.5 (2.85")
Y [mm]	–
Z [mm]	–
INDEX TRAUB products	MS16-6 • MS16-6 Plus

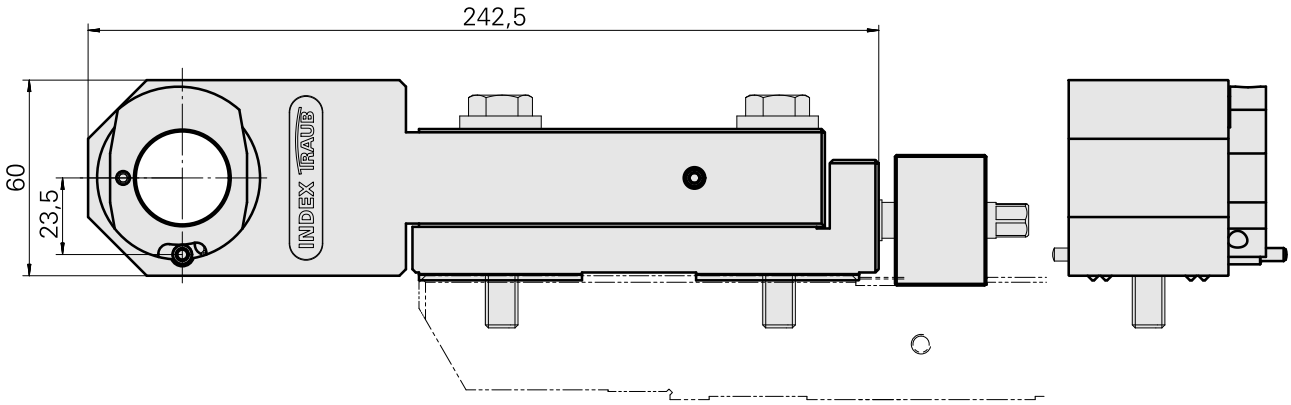

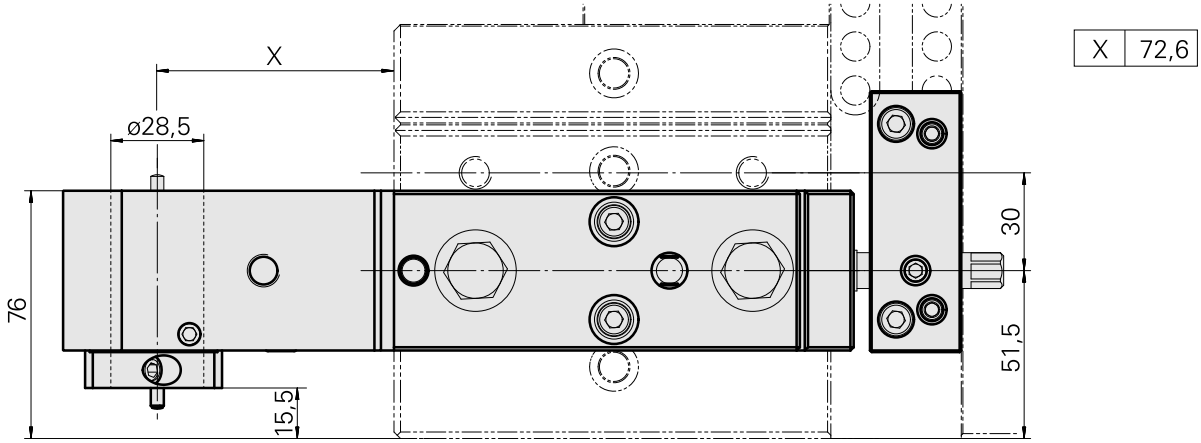

X	72,6

Documents

Product notes

DE (pdf)

EN (pdf)

FR (pdf)

FR (pdf)

DE (pdf)

EN (pdf)

Accessories

Optional accessories

MS tool holders

Blanking plug

Product ID : 12013851
Previous product ID :

Drive	Fixation MS	X [mm]	Y [mm]
not live	Clamping ring D28.5	–	–
Z [mm]			
–			

Calibrating tool

Product ID : 12088616
Previous product ID :

Drive	Fixation MS	X [mm]	Y [mm]
not live	Clamping ring D28.5	–	–
Z [mm]	INDEX TRAUB products		
–	MS24-6 • MS16-6 • MS16-6 Plus • MS22-6 • MS22-8		

Other accessories

Stop

Product ID : 10685423
Previous product ID : W9991106

Not defined Standard MS22

Product ID : 10132929
Previous product ID : WM3100.3150F