Presetting device /INDEX CAPTO C6

Technical data

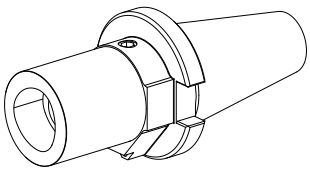

TH accessories category	Adapter for presetting units
Mounting	SK50
Tool mounting	CAPTO C6

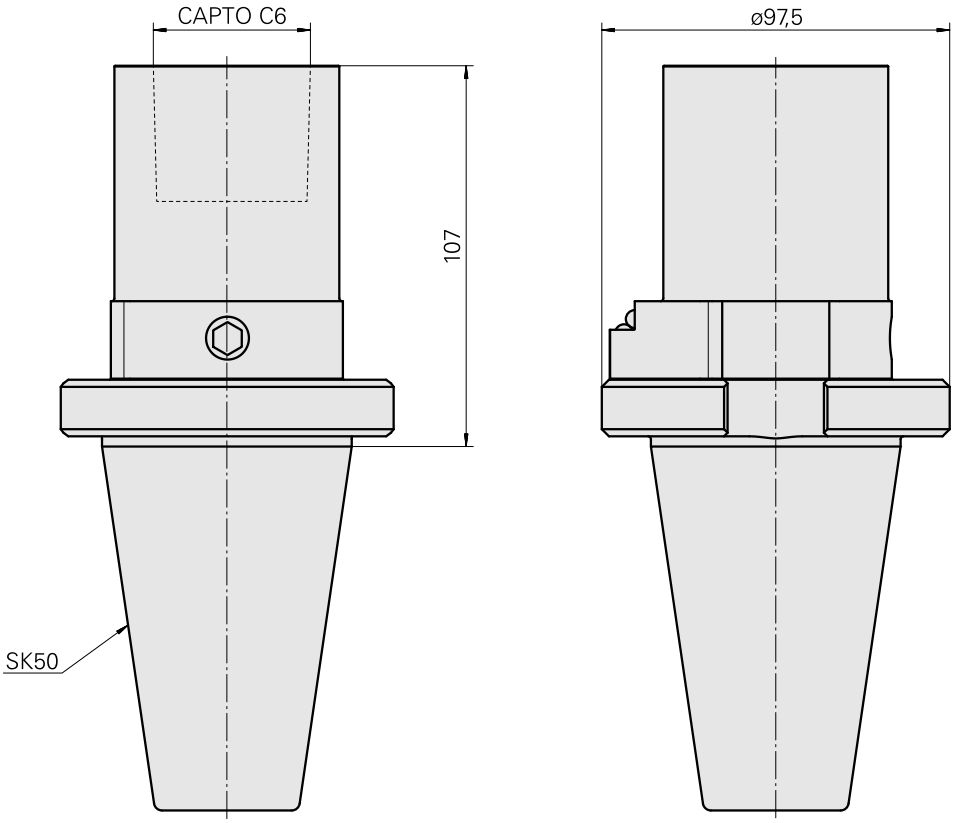

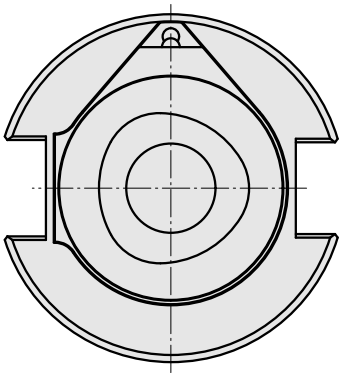

Documents

No downloads available for this product