INDEX

Embossing roll holder VDI 40

Technical data

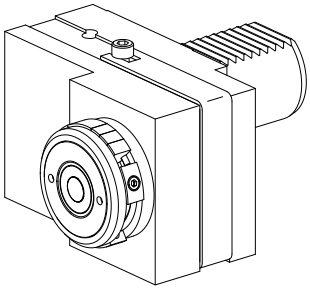

Shank VDI	VDI 40
Drive	not live
Fixation VDI	none
reversable 180°	no
X [mm]	75 (2.95")
Y [mm]	–
Z [mm]	67.5 (2.66)
INDEX TRAUB products	G300 • G400 • V200 • G250 • V160C • V160G • V300 • TNA400 • B400 • B500 • TNA500.2 • TNA400.2 • TNA400.3 • B400.3 • B500.3 • TNA500.3

Note

Cooling lubricant supply unit required!

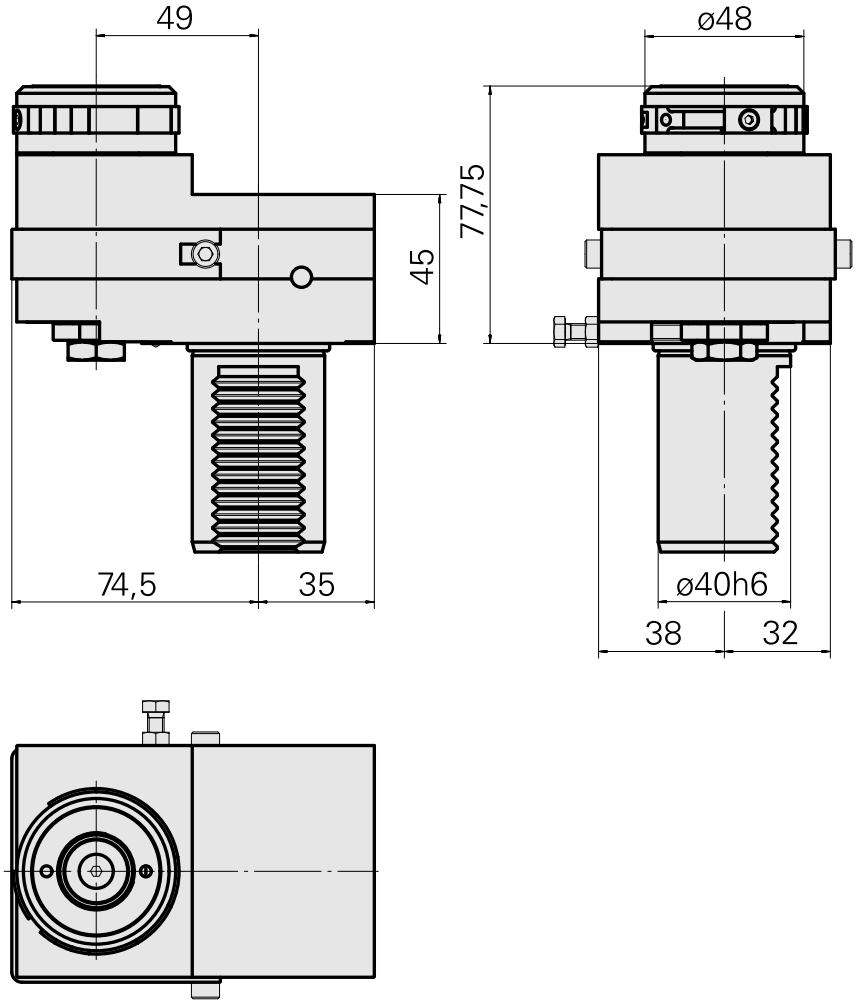
49
ø48
77,75
45
74,5
35
ø40h6
38
32

Documents

No downloads available for this product

Accessories

Optional accessories

Tool holder accessories

Embossing roller, D50 mm (1.96")

Product ID : 10609077
Previous product ID : W63380.0030

TH accessories category
Embossing roller

Embossing roller, D60 mm (2.36")

Product ID : 10446615
Previous product ID : W63380.0060

TH accessories category
Embossing roller