Drilling tool holder HSK 25 C DIN 1835 B

Technical data

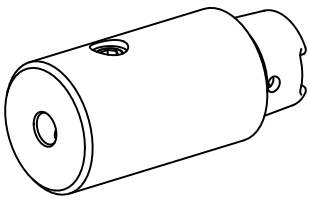

Shank HSK	HSK 25
Form HSK	C
Mounting	DIN 1835 B/E D6
Cooling	internal
Pressure	40 bar
X [mm]	42 (1.65")
INDEX TRAUB products	MS22-6 • MS22-8 • MS16-6

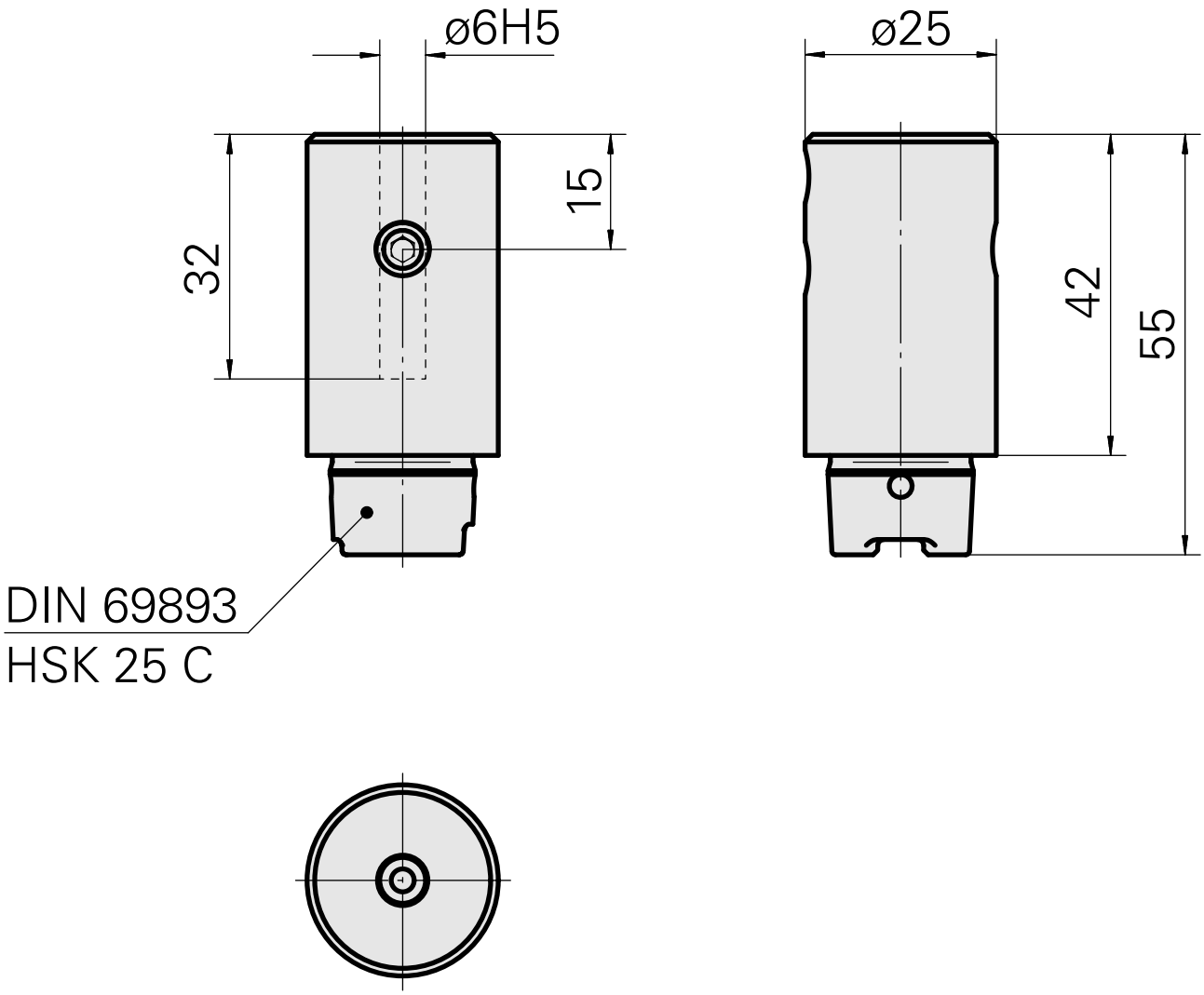

Documents

No downloads available for this product