INDEX

WFB 20-12 D10

Technical data

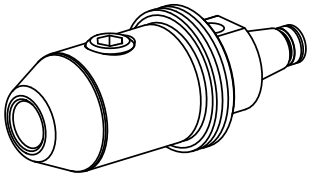

TH accessories category	WFB 20-12
Mounting	D10
Quick change inserts	Weldon mounting

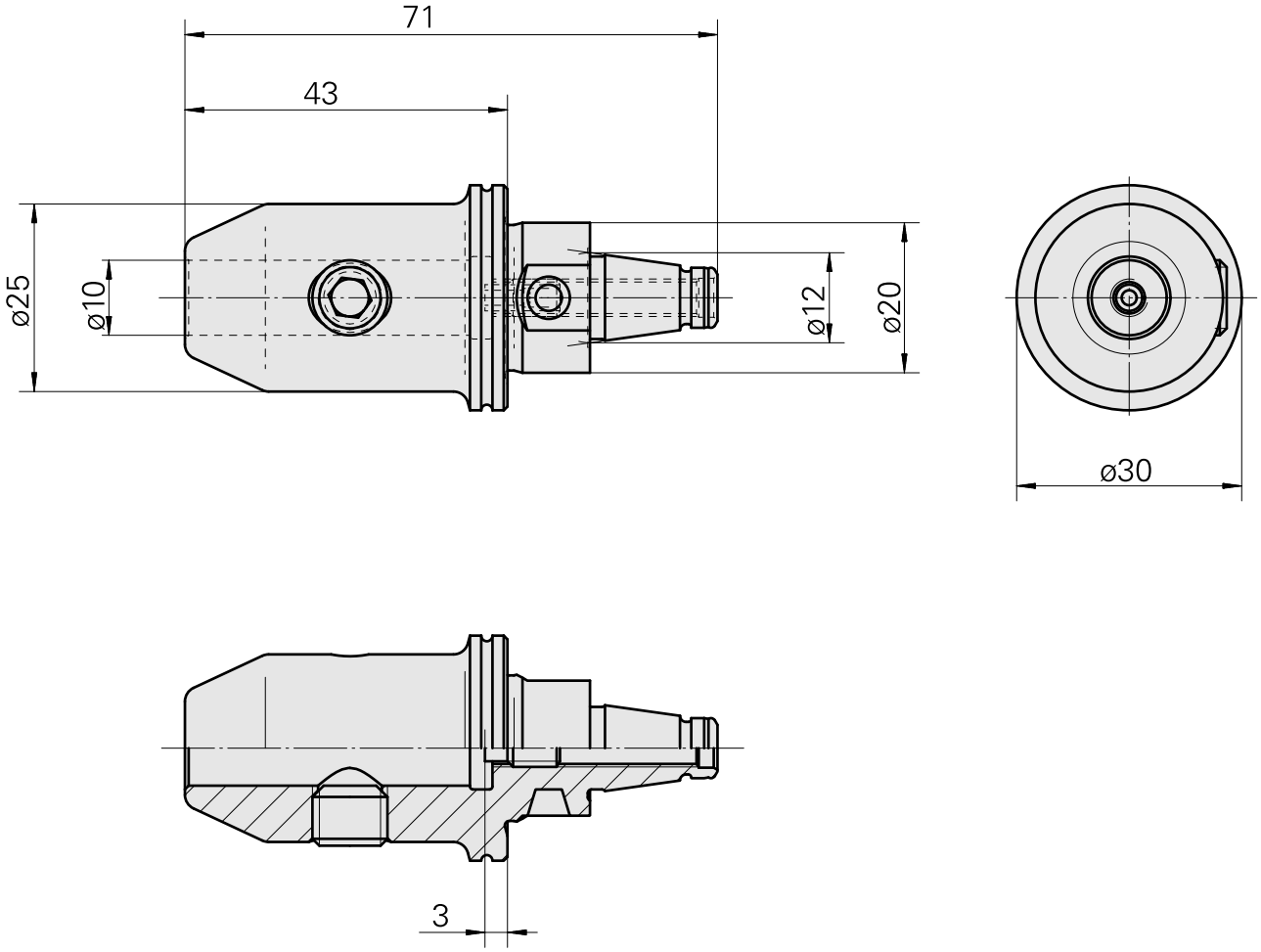

Documents

No downloads available for this product

Accessories

Optional accessories

Other accessories

Adjusting screw M 5x10

Product ID : 10674886
Previous product ID : 326793

Clamping screw M10x 8 (110AWS)

Product ID : 10398283
Previous product ID : 326791