WFB 32-20 for Threading insert 3EL-, right, without gripper groove

Technical data

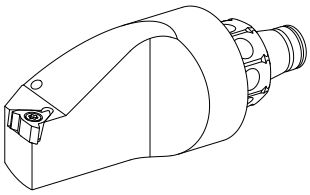

TH accessories category	WFB 32-20
Mounting	for Threading insert 3EL-
Quick change inserts	Turning tool holder

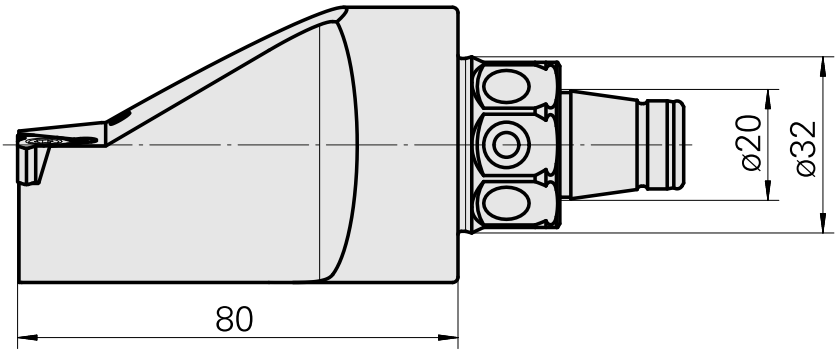

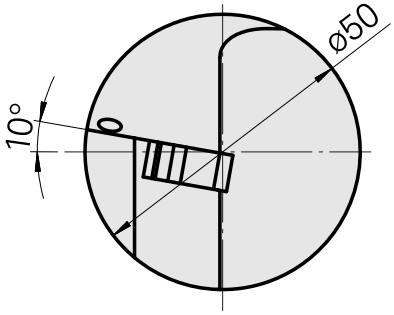

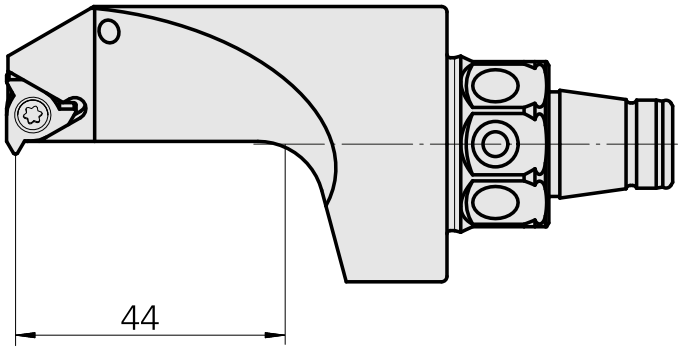

Documents

No downloads available for this product