INDEX CAPTO C3 ER16

Technical features

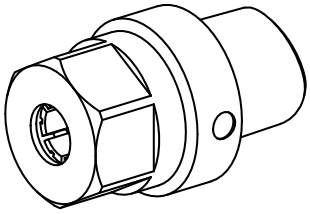

TH accessories category	INDEX CAPTO C3
Mounting	ER16
Quick change inserts	collet mounting

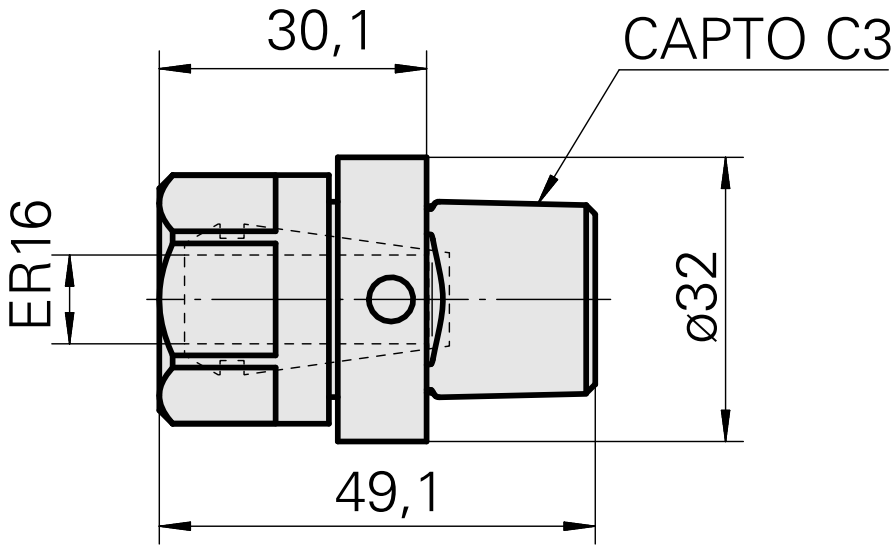

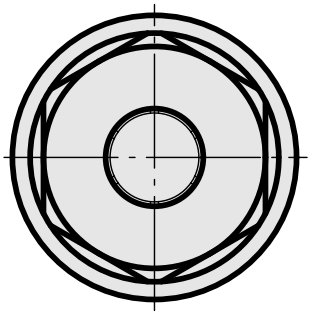

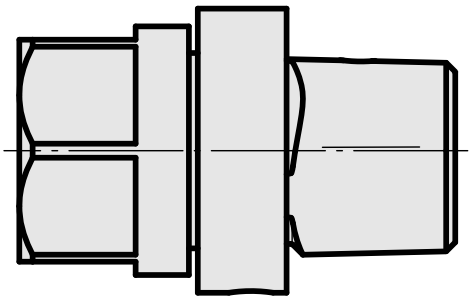

Documents

No downloads available for this product

Accessories

Required for operation

Spanner

Product ID : 10966369
Previous product ID : 490219.0161

TH accessories category	Mounting	Collet type	Clamping nut type
Tool	ER16	ER 16	Female thread
Tools for Collet chucks Clamping nut wrench			

Optional accessories

Tool holder accessories

Clamping collet

Product ID : 11032316
Previous product ID : 901930.1010

TH accessories category	Mounting	Tool mounting	Collet type
ER-Collet chuck	ER16	0.5 - 1 mm	ER 16

Clamping collet, complete set with all collets

Product ID : 10040892
Previous product ID : 901930.1000

TH accessories category	Mounting	Tool mounting	Collet type
ER-Collet chuck	ER16	0.5 - 10 mm	ER 16

Clamping collet

Product ID : 10435501
Previous product ID : 901930.1020

TH accessories category	Mounting	Tool mounting	Collet type
ER-Collet chuck	ER16	1 - 2 mm	ER 16

Clamping collet

Product ID : 10798023
Previous product ID : 901930.1030

TH accessories category	Mounting	Tool mounting	Collet type
ER-Collet chuck	ER16	2 - 3 mm	ER 16

Clamping collet

Product ID : 10780445
Previous product ID : 901930.1040

TH accessories category	Mounting	Tool mounting	Collet type
ER-Collet chuck	ER16	3 - 4 mm	ER 16

Clamping collet

Product ID : 10081968
Previous product ID : 901930.1050

TH accessories category	Mounting	Tool mounting	Collet type
ER-Collet chuck	ER16	4 - 5 mm	ER 16

Clamping collet

Product ID : 10878266
Previous product ID : 901930.1060

TH accessories category	Mounting	Tool mounting	Collet type
ER-Collet chuck	ER16	5 - 6 mm	ER 16

Clamping collet

Product ID : 10051623
Previous product ID : 901930.1070

TH accessories category	Mounting	Tool mounting	Collet type
ER-Collet chuck	ER16	6 - 7 mm	ER 16

Clamping collet

Product ID : 10077058
Previous product ID : 901930.1080

TH accessories category	Mounting	Tool mounting	Collet type
ER-Collet chuck	ER16	7 - 8 mm	ER 16

Clamping collet

Product ID : 10859314
Previous product ID : 901930.1090

TH accessories category	Mounting	Tool mounting	Collet type
ER-Collet chuck	ER16	8 - 9 mm	ER 16

Clamping collet

Product ID : 10909510
Previous product ID : 901930.1100

TH accessories category	Mounting	Tool mounting	Collet type
ER-Collet chuck	ER16	9 - 10 mm	ER 16

Clamping nut

Product ID : 10378189
Previous product ID : 901939.01

TH accessories category	Mounting	Collet type	Clamping nut type
Clamping nut	ER16	ER 16	Female thread

Other accessories

Clamping collet

Product ID : 10589709
Previous product ID : W99903--

tapping tool collet ET-1-16

Product ID : 10542491
Previous product ID : 3230--

tapping tool collet

Product ID : 10865233
Previous product ID : WZ9990.9506F

Collet chuck

Product ID : 10870393
Previous product ID : W999065-

Clamping collet, sealed

Product ID : 10433061
Previous product ID : W999083-