Grooving tool holding block Trapezoid 26, horizontally adjustable

Technical data

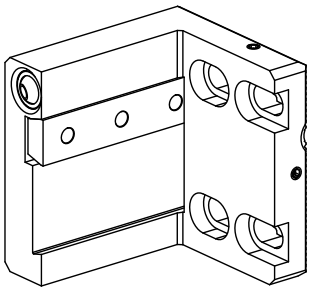

Drive	not live
Cooling	external
Pressure	40 bar
Mounting	Trapezoid 26x5
X [mm]	56 (2.20")
Y [mm]	–
Z [mm]	15 (0.59)
INDEX TRAUB products	C100

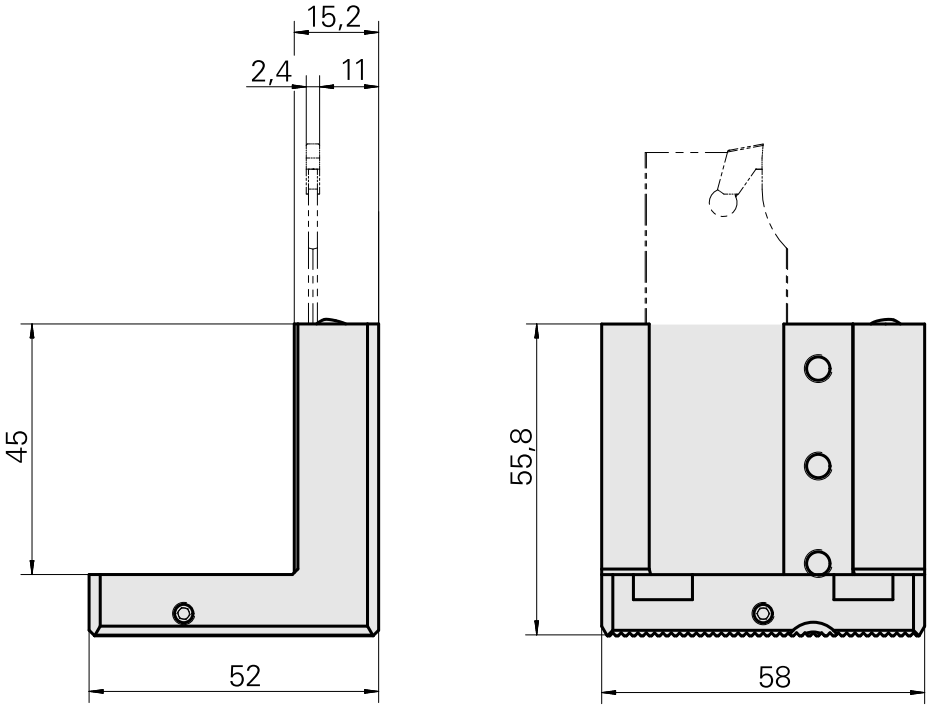

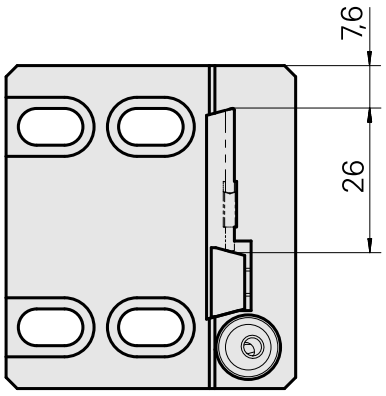

Documents

No downloads available for this product

Accessories

Optional accessories

Other accessories

BALL SPRAY NOZZLE 10D/M4

Product ID : 10679818
Previous product ID : 474550.0081