INDEX

3-jaw chuck

Technical data

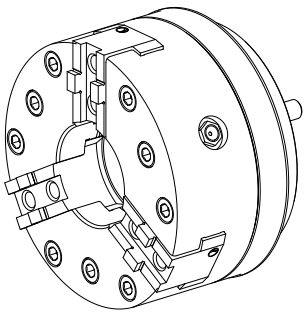

INDEX TRAUB products	MS40-6 • MS40P
Spindle clearance	40mm
Machining side	Counter spindle
manufacturer product line	KFD-HS112/3
Spindle mounting	AP72
manufacturer product line	Roehm

No 3-side view is currently available for this product

Documents

No downloads available for this product

Accessories

Optional accessories

Turcon® Glyd Ring®

Shaft packing

Product ID : 10417845
Previous product ID : 479160.0602

manufacturer product line Trelleborg	TSS material no.	Groove base diameter 52.5 Millimeter	Groove width 3.2 Millimeter
Bore diameter [mm] 60 Millimeter	manufacturer product line Turcon® Glyd Ring®		

O-Rings

O-RING

Product ID : 10913241
Previous product ID : 479108.0371

manufacturer product line Trelleborg	TSS material no.	Cord size 1.78 Millimeter	manufacturer product line O-ring

Other accessories

Socket head screw

Product ID : 10997130
Previous product ID : 410260.0820

Threaded bush

Product ID : 10551192
Previous product ID : M82011.40

INDEX

Boring fixture

Product ID : 10916716
Previous product ID : 908127.8001