INDEX

# Drilling tool holder VDI 40 DIN 1835 B/E, Form E1

## Technical data

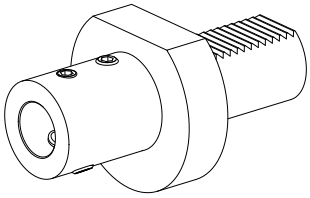

| | |
|---|---|
| **Shank VDI** | VDI 40 |
| **Drive** | not live |
| **Fixation VDI** | none |
| **Cooling** | internal |
| **Pressure** | 40 bar |
| **Mounting** | DIN 1835 B/E D25 |
| **reversable 180°** | no |
| **X [mm]** | 75 (2.95") |
| **Y [mm]** | – |
| **Z [mm]** | – |
| **INDEX TRAUB products** | V200 • V160C • V160G • V300 • TNA400 • B400 • B500 • TNA500.2 • TNA400.2 • TNA400.3 • B400.3 • B500.3 • TNA500.3 |

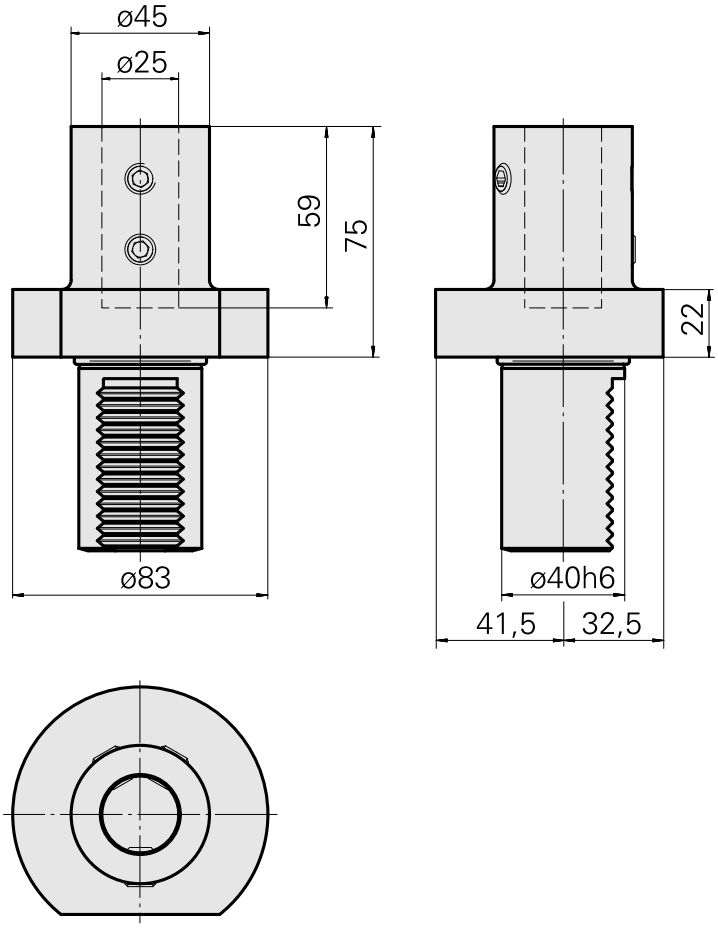

## Documents

No downloads available for this product

## Accessories

### Optional accessories

**Other accessories**

Mounting sleeve with collar D25

Product ID : 10070544
Previous product ID : W62221.41--

Grub screw

Product ID : 10371318
Previous product ID : W00013.0039