INDEX

Drilling tool holder VDI 40 DIN 1835 B/E, Form E1

Technical data

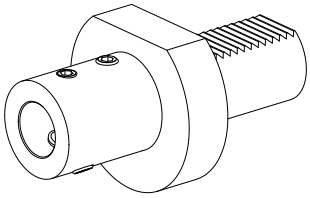

Shank VDI	VDI 40
Drive	not live
Fixation VDI	none
Cooling	internal
Pressure	40 bar
Mounting	DIN 1835 B/E D25
reversable 180°	no
X [mm]	75 (2.95")
Y [mm]	–
Z [mm]	–
INDEX TRAUB products	V200 • V160C • V160G • V300 • TNA400 • B400 • B500 • TNA500.2 • TNA400.2 • TNA400.3 • B400.3 • B500.3 • TNA500.3

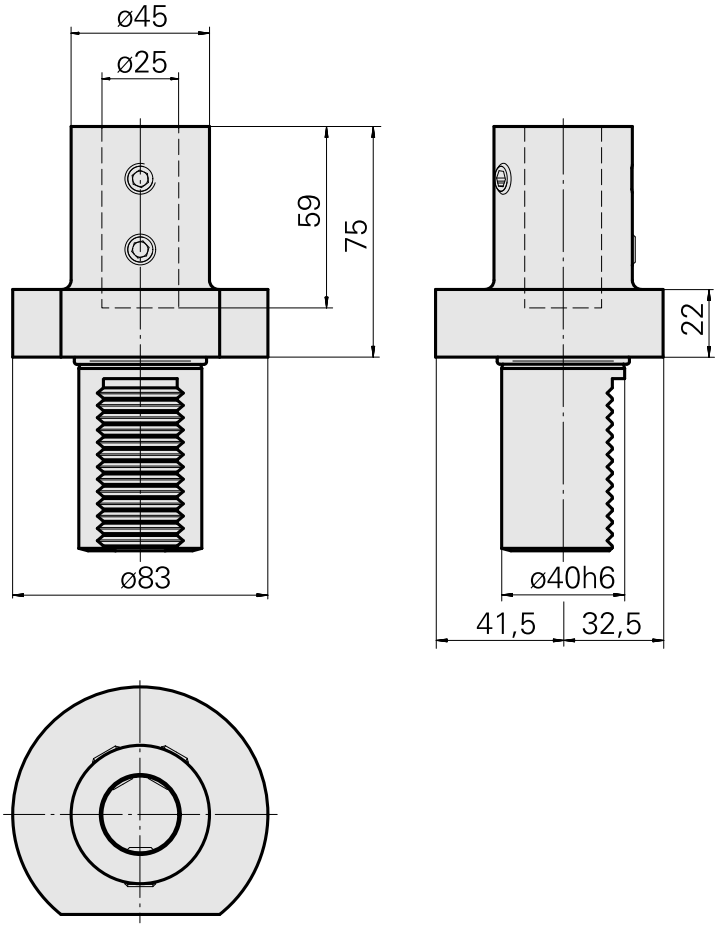

Documents

No downloads available for this product

Accessories

Optional accessories

Other accessories

Mounting sleeve with collar D25

Product ID : 10070544
Previous product ID : W62221.41--

Grub screw

Product ID : 10371318
Previous product ID : W00013.0039