Turning tool holder MS16/MS22 Square 12x

Technical data

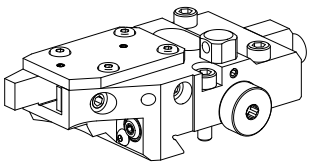

Slide system MS	MS16/MS22
Drive	not live
Fixation MS	Dovetail
Cooling	external
Pressure	20 bar
Direction	right-handed run
Mounting	Square 12x12
X [mm]	55 (2.17")
Y [mm]	–
Z [mm]	13 (0.51)
INDEX TRAUB products	MS16-6 • MS22-8 • MS22-6 • MS24-6 • MS24-8 • MS16-6 Plus

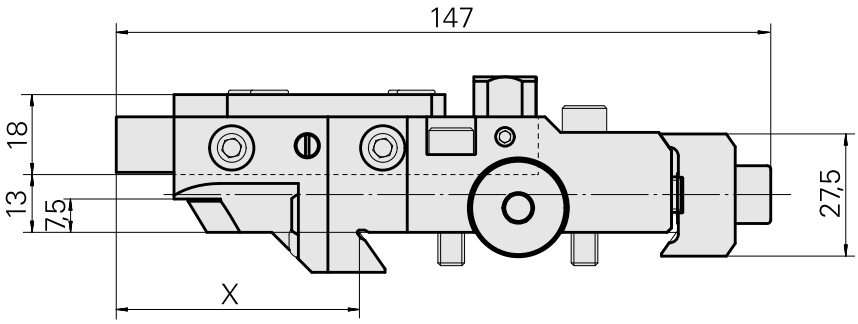

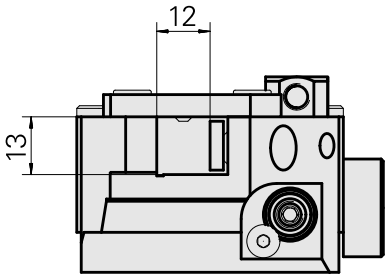

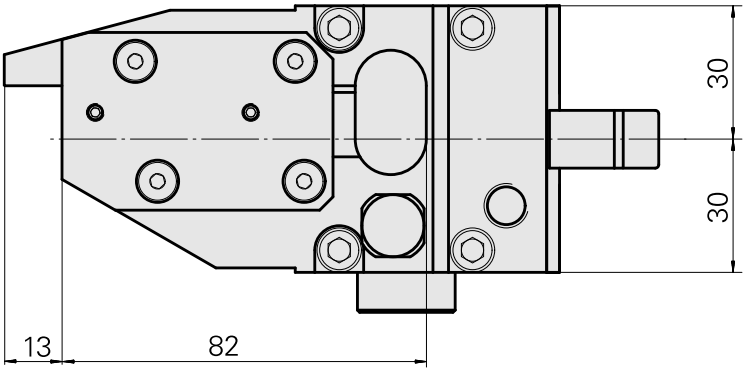

X	55

Documents

No downloads available for this product

Accessories

Optional accessories

Tool holder accessories

[tube, L = 100 mm (3.93") with nut]

Product ID : 10938183
Previous product ID : W00019.0164

TH accessories category	Mounting
Cooling lubricant tube	M6

Other accessories

[BALL SPRAY NOZZLE 12D/M6]

Product ID : 10602750
Previous product ID : 474550.0101

[Lens head screw]

Product ID : 10344546
Previous product ID : 410243.0406

[Coolant nozzle D10; M6]

Product ID : 10562562
Previous product ID : W00019.0153