Clamping nut

Technical data

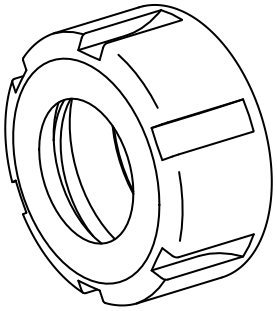

TH accessories category	Clamping nut
Mounting	ER40
Collet type	ER 40
Clamping nut type	Female thread

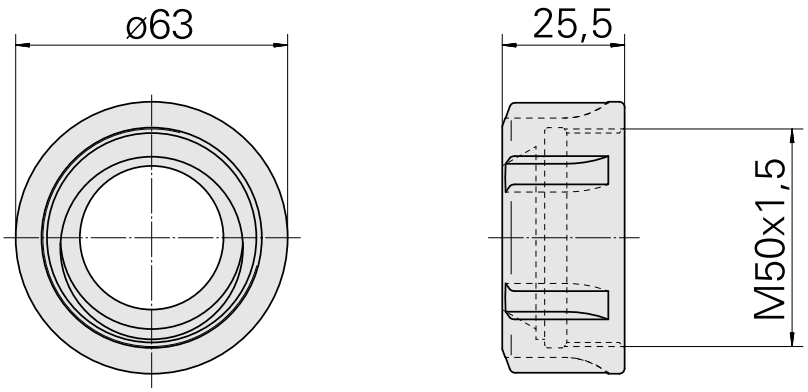

Documents

No downloads available for this product