10348144
981824.G180UP

INDEX

Clamping collet 145E/F25 Ø=18,00

Technical data

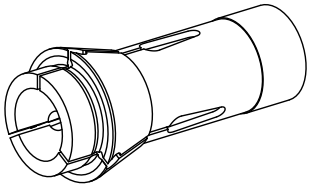

Clamping device size	145E/F25
manufacturer product line	
Clamping type	smooth
Nominal diameter (mm)	18 Millimeter
Clamping method	External clamping
Collet version	Slots vulcanized (standard)
manufacturer product line	Schlenker

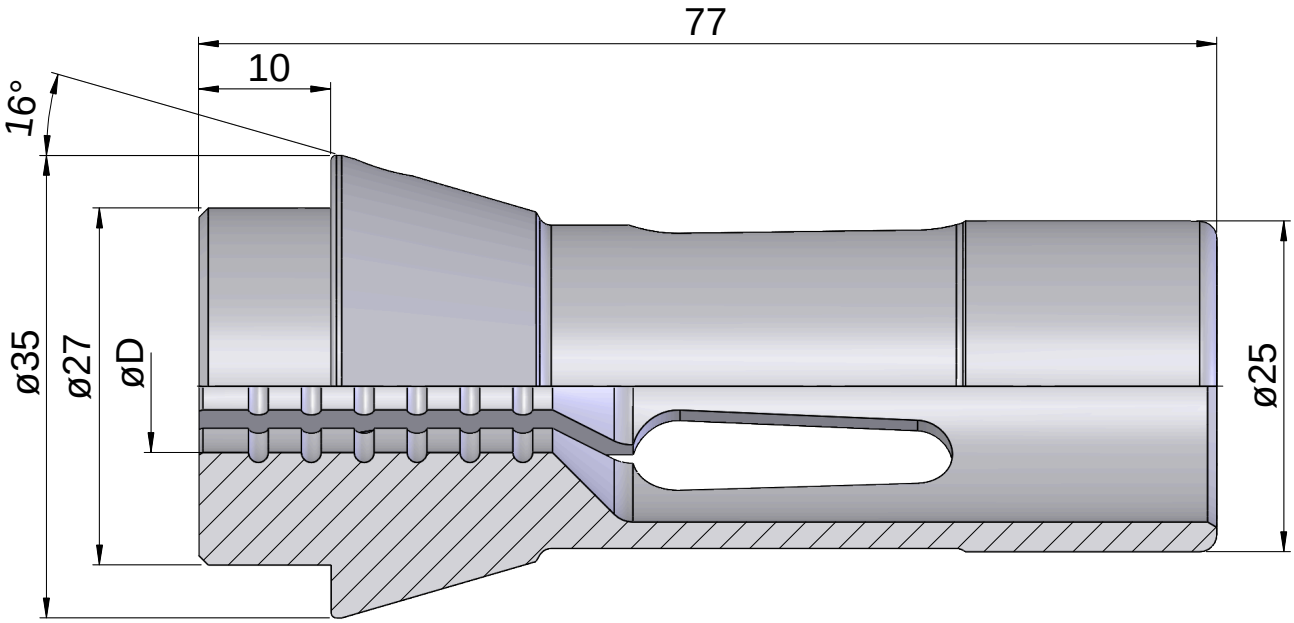

INDEX

Documents

No downloads available for this product