# Nozzle

## Technical data

There are currently no additional technical features stored for this product

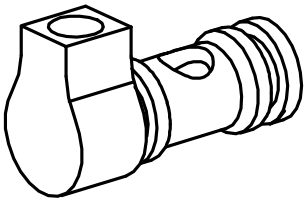

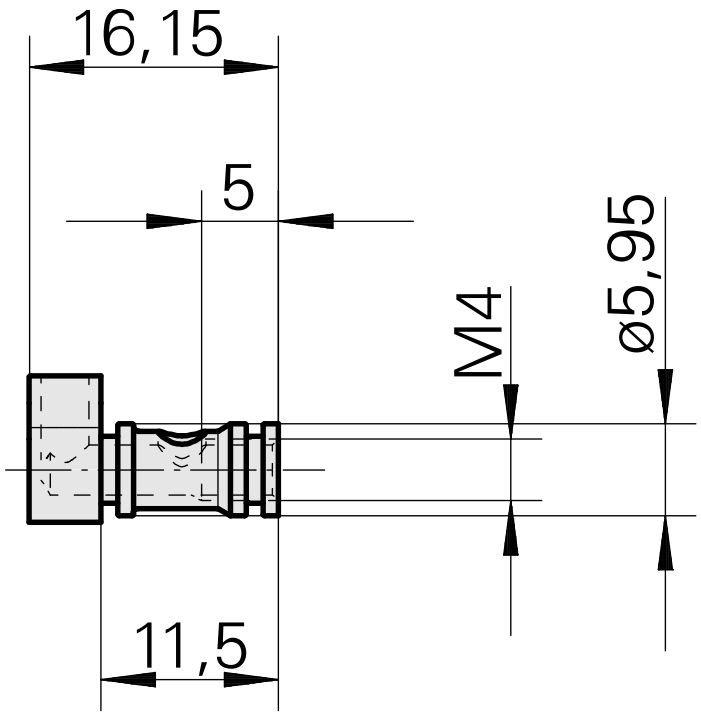


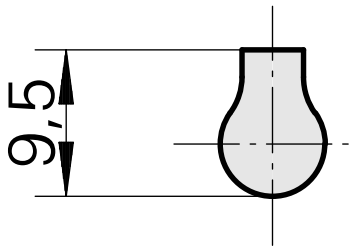

## Documents

No downloads available for this product