ER-Collet chuck for taps ET 1-16 1.6mm

Technical data

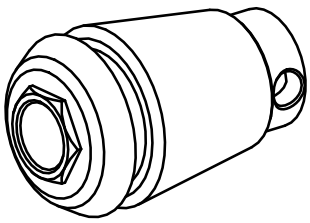

TH accessories category	ER-Collet chuck for taps
Mounting	ER16
Tool mounting	1.6mm
Collet type	ET 1-16

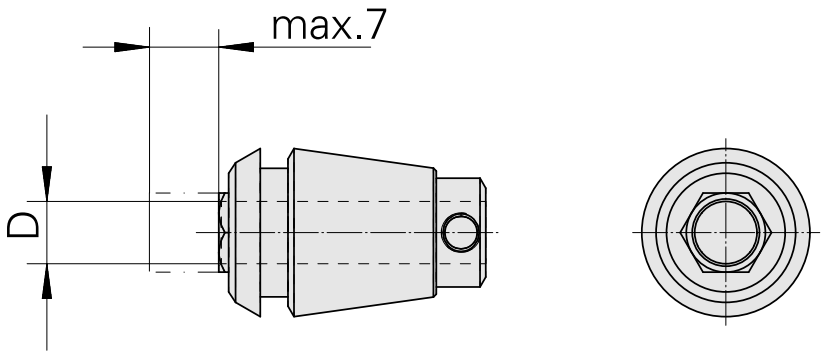

Documents

No downloads available for this product