Turning tool holder MS16/MS22 Square 16x

Technical data

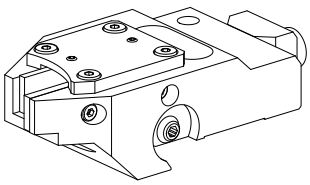

Slide system MS	MS16/MS22
Drive	not live
Fixation MS	Dovetail
Cooling	external
Pressure	20 bar
Direction	left-handed run
Mounting	Square 16x16
X [mm]	49.7 (1.96")
Y [mm]	–
Z [mm]	14.5 (0.57)
INDEX TRAUB products	A100 • MS16-6 • MS22-6 • MS22-8 • MS24-6 • MS24-8 • MS16-6 Plus

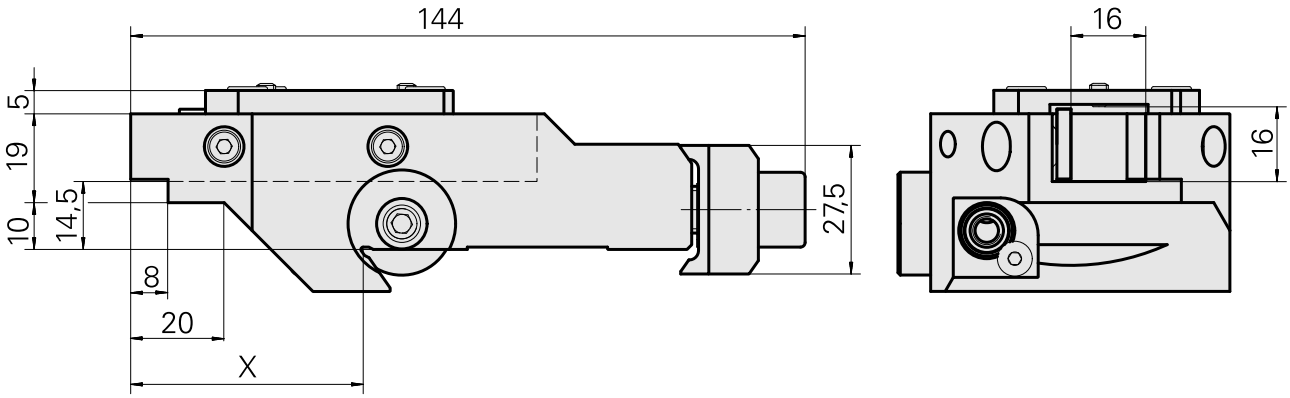

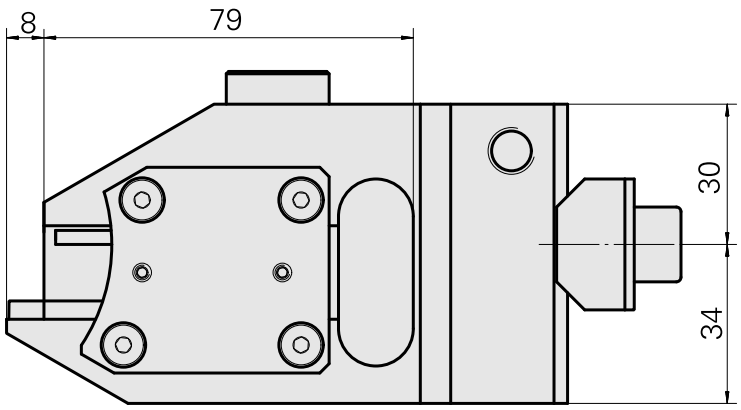

X	49,7

Documents

No downloads available for this product

Accessories

Optional accessories

Tool holder accessories

tube, M6x48,45°

Product ID : 10683174
Previous product ID : W63501.2622

TH accessories category	Mounting
Cooling lubricant tube	M6

plate, height 4 mm (0.15")

Product ID : 11011909
Previous product ID : W94060.4806

TH accessories category	Mounting
Compensation plate	Square 16x16

Other accessories

BALL SPRAY NOZZLE 12D/M6

Product ID : 10602750
Previous product ID : 474550.0101

Lens head screw

Product ID : 10344546
Previous product ID : 410243.0406