AC-Motor 12Nm 3000 600V

Technical data

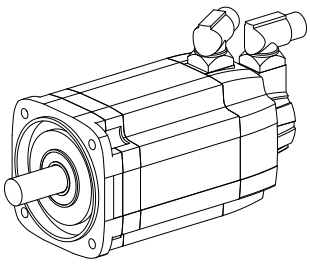

manufacturer product line	Siemens
Electrical assemblies	Servomotor
manufacturer product line	1FT7
Length	236 Millimeter
Width	126 Millimeter
Height	167 Millimeter
Voltage	600 Volt
Voltage type	AC~
(Nominal) speed (rpm)	3000 1/minute
(Stall) torque [Nm]	12 Newton/meter
Plug connection/type	M23 (size 1 / encoder)
Protection class	IP67
Encoder resolution (ST)	2048 Piece
Encoder type	Increment
Brake	no – unbraked
Motor design	IM B5

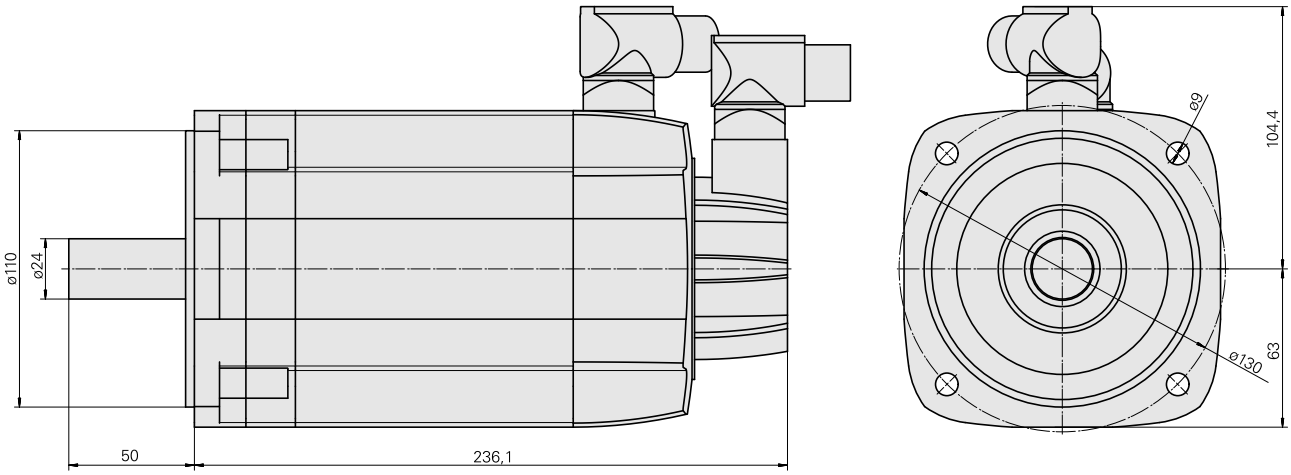

Documents

Product notes

FR (pdf)

EN (pdf)

DE (pdf)