# CL feeder, fixed TNL12.2, Back/front working unit

## Technical data

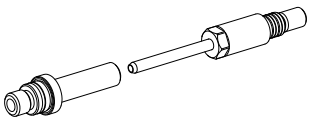

There are currently no additional technical features stored for this product

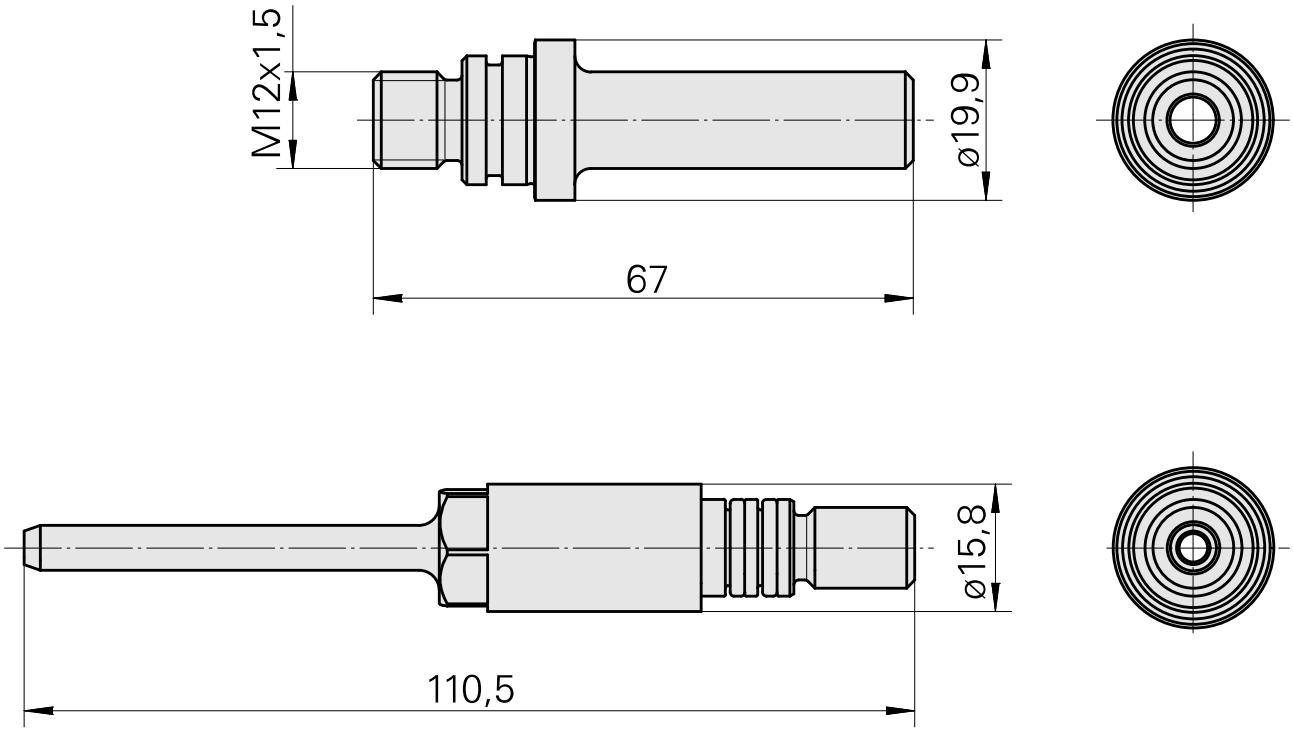

## Documents

No downloads available for this product

## Accessories

### Optional accessories

**Other accessories**

Spanner

Product ID : 12083203
Previous product ID :