10955803
836610

INDEX

WFB 20-12 D6

Technical data

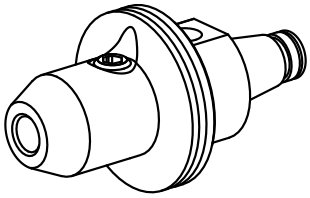

TH accessories category	WFB 20-12
Mounting	D6
Quick change inserts	Weldon mounting

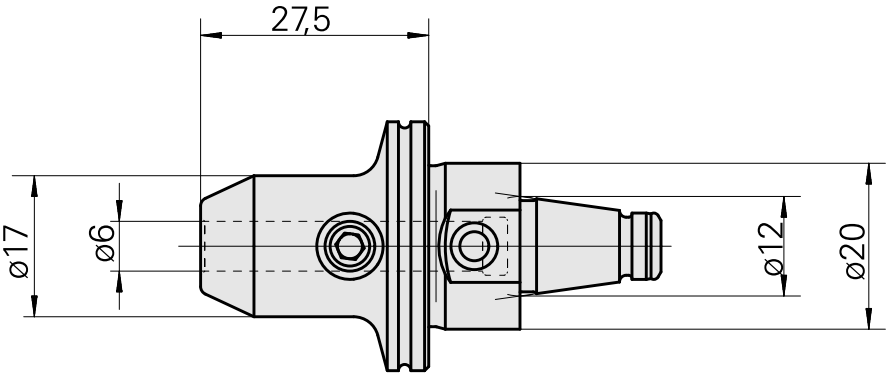

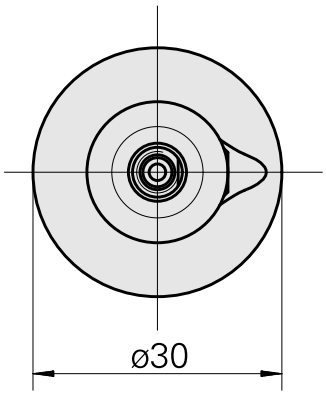

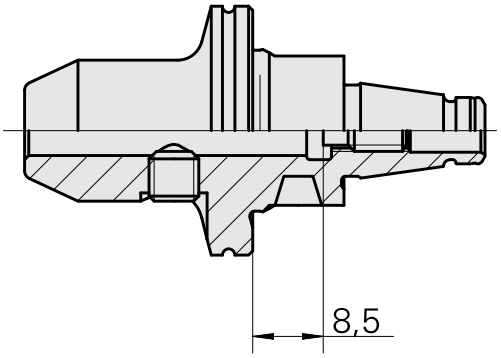

Documents

No downloads available for this product

Accessories

Optional accessories

Other accessories

Adjusting screw M 5x10

Product ID : 10674886
Previous product ID : 326793

Clamping screw M 6x 6 (106AWS)

Product ID : 10565283
Previous product ID : 326789