INDEX

WFB 32-20 Shrink-fit mounting D14

Technical data

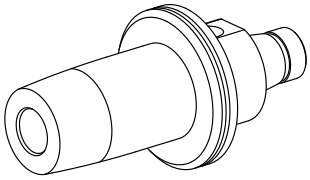

TH accessories category	WFB 32-20
Mounting	Shrink-fit mounting D14
Quick change inserts	shrink-fit mounting

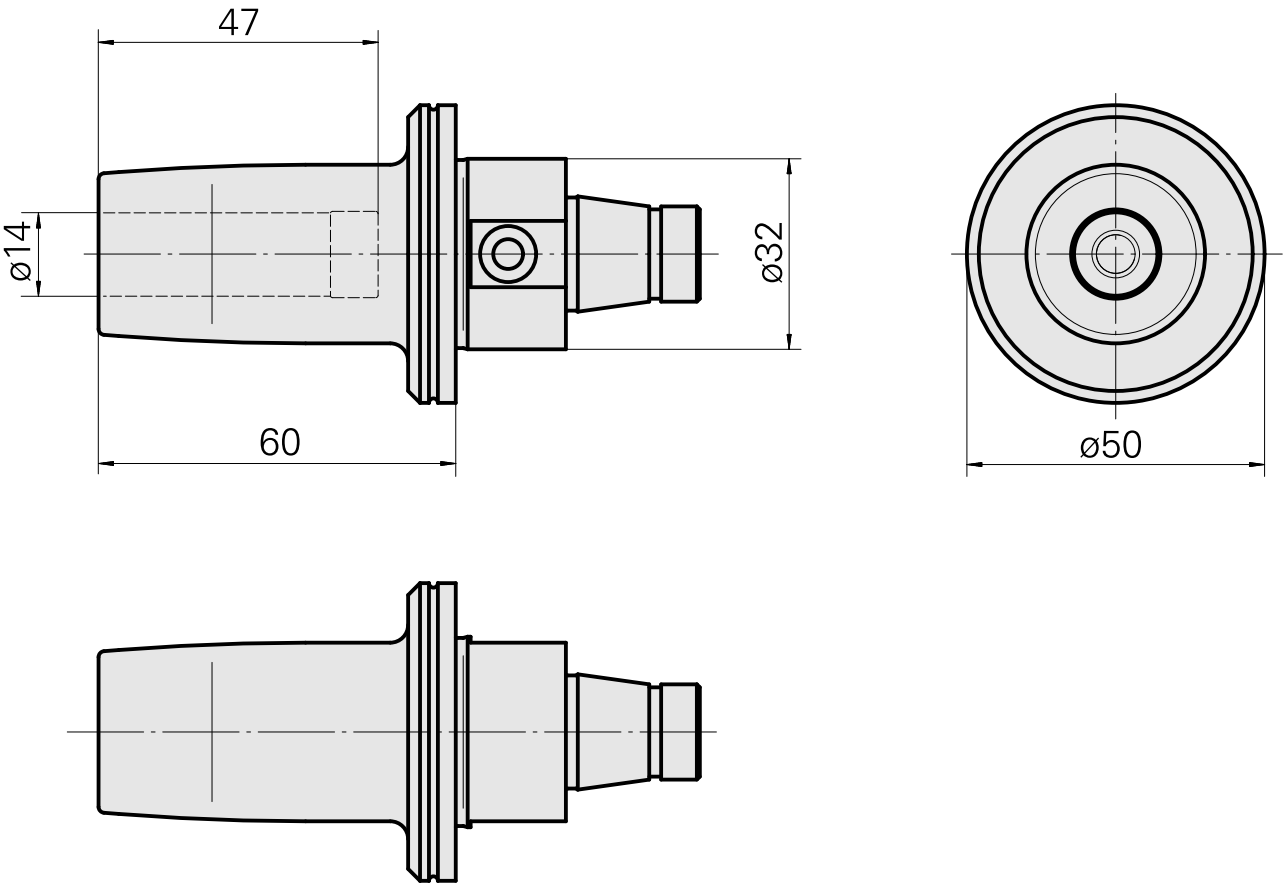

Documents

No downloads available for this product