10536795
900463.4241

INDEX

Clamping head SK42 D=41,0mm

Technical data

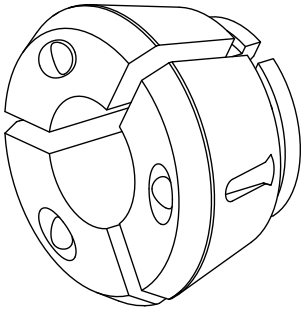

Clamping device size	SK42
manufacturer product line	SPANNTOP nova chuck
Clamping type	grooved
Nominal diameter (mm)	41 Millimeter
Clamping method	External clamping
manufacturer product line	Hainbuch

No 3-side view is currently available for this product

Documents

No downloads available for this product