INDEX CAPTO C3 Milling shaft D22, with cutter tightening screw

Technical data

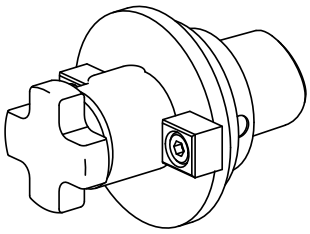

TH accessories category	INDEX CAPTO C3
Mounting	Milling shaft D22
Quick change inserts	mill arbor mounting

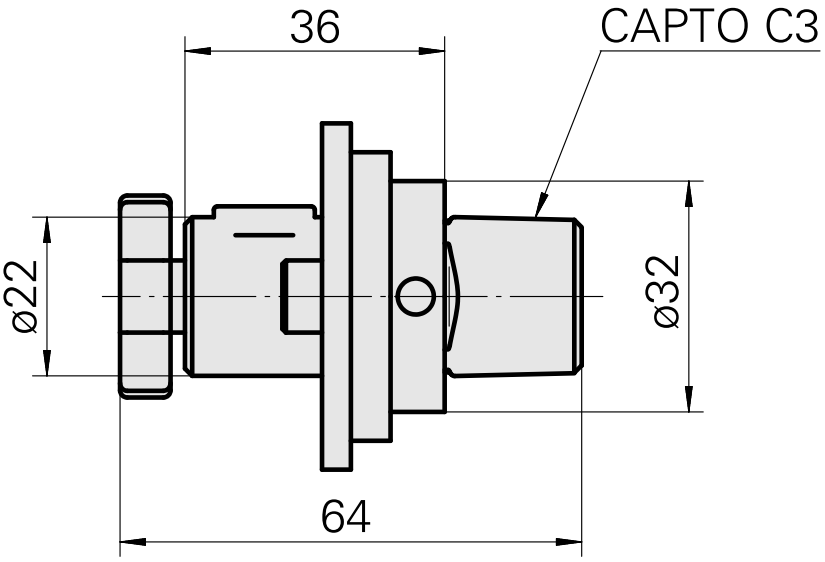

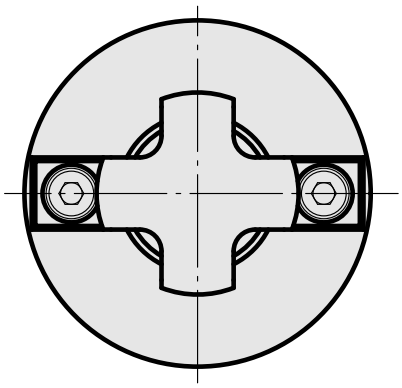

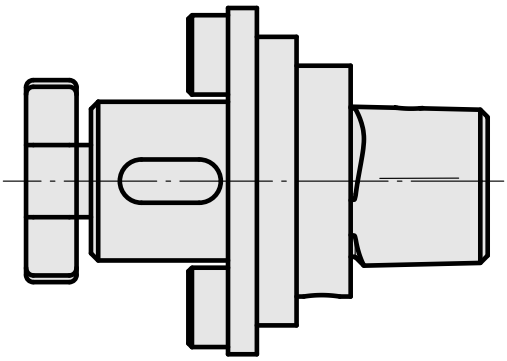

Documents

No downloads available for this product

Accessories

Required for operation

mill arbor wrench

Product ID : 10428155
Previous product ID : 203020.1220

TH accessories category	Mounting	Tools for Collet chucks
Tool	Milling shaft D22	Mill arbor wrench

Optional accessories

Tool holder accessories

Screw

Product ID : 10638143
Previous product ID : 250122.1028

TH accessories category	Mounting
Cutter tightening screw	M10