Adaptor

Technical data

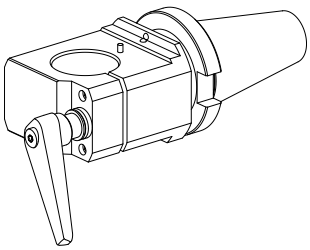

TH accessories category	Adapter for presetting units
Mounting	SK50
Tool mounting	Pinole D51

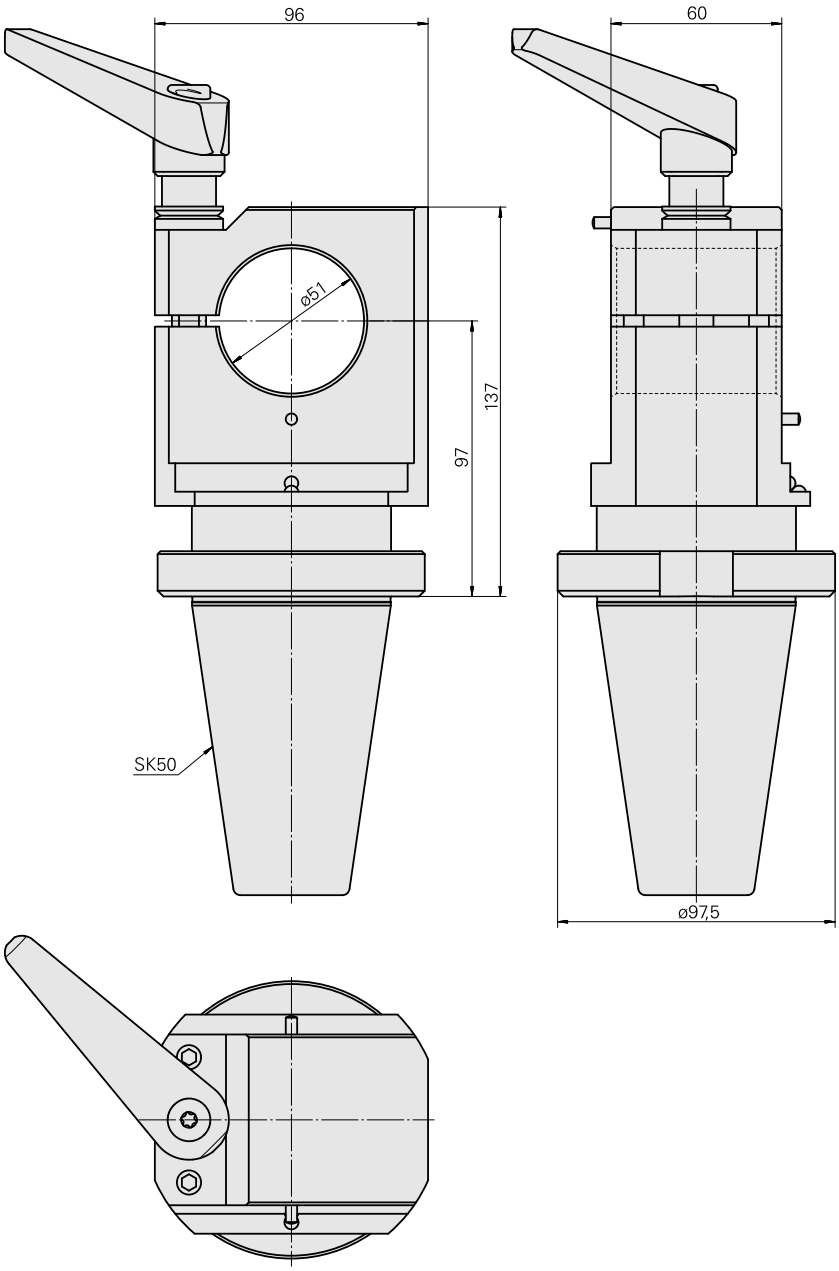

Documents

No downloads available for this product