Presetting device D80/MS24 QS Schnellspa

Technical data

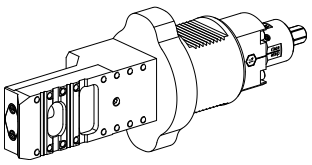

TH accessories category	Adapter for presetting units
Mounting	D80 for presetting devices
Tool mounting	MS24 Cross slide

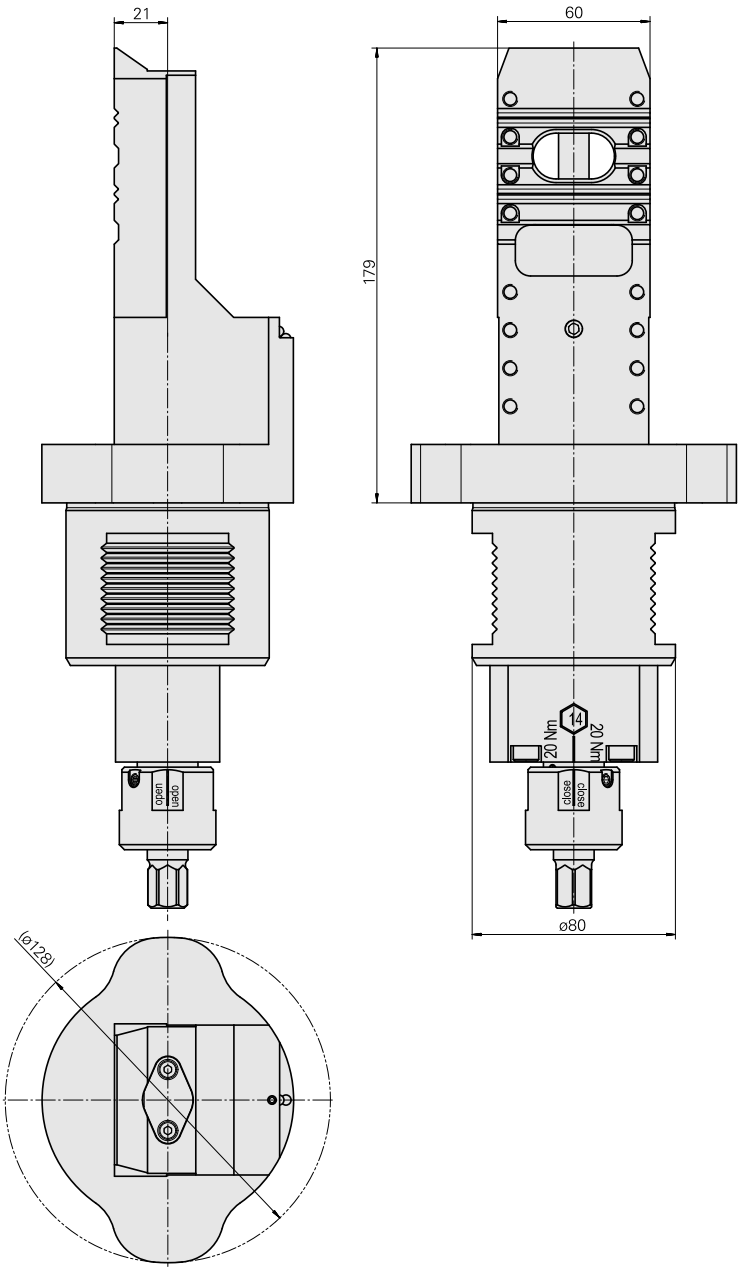

Documents

No downloads available for this product