Clamping collet 1212E/F16 Ø=12,00

Technical data

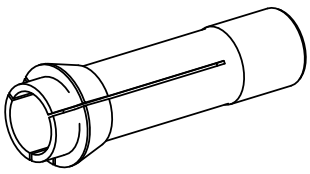

Clamping device size	1212E/F16
manufacturer product line	
Clamping type	grooved
Nominal diameter (mm)	12 Millimeter
Clamping method	External clamping
manufacturer product line	Schlenker

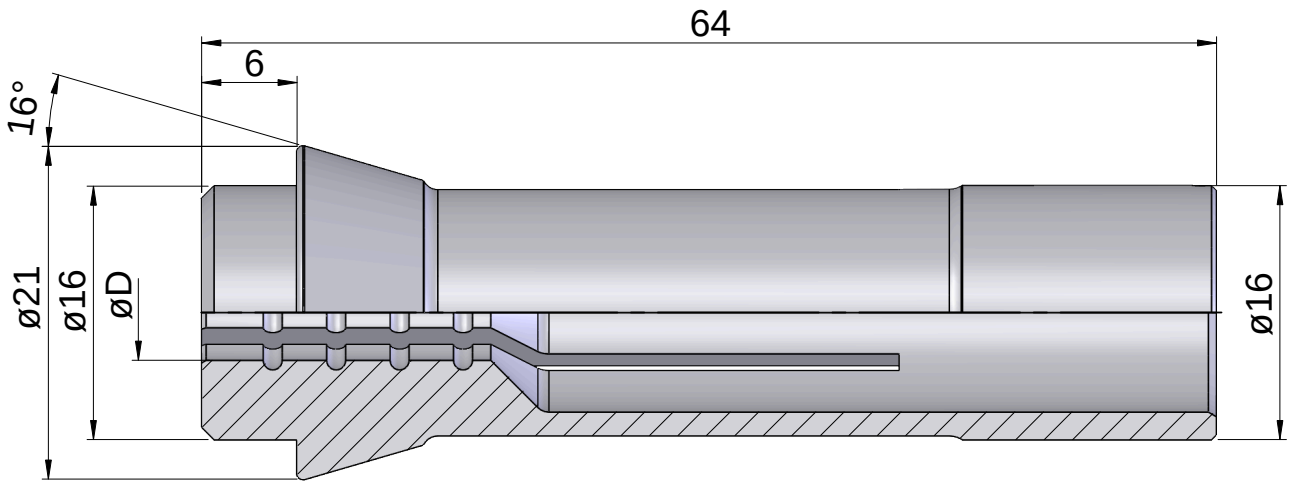

Documents

No downloads available for this product