INDEX

# Guide bush T223 Ø=13,00

## Technical data

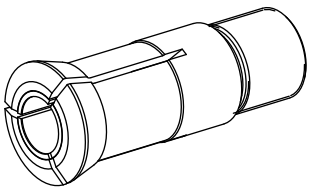

| | |
|---|---|
| **Clamping device size** | T223 |
| **manufacturer product line** | |
| **Clamping type** | with carbide insert |
| **Nominal diameter (mm)** | 13 Millimeter |
| **Clamping method** | External clamping |
| **Collet design** | adjustable |
| **Collet version** | Slots vulcanized (standard) |
| **manufacturer product line** | Schlenker |

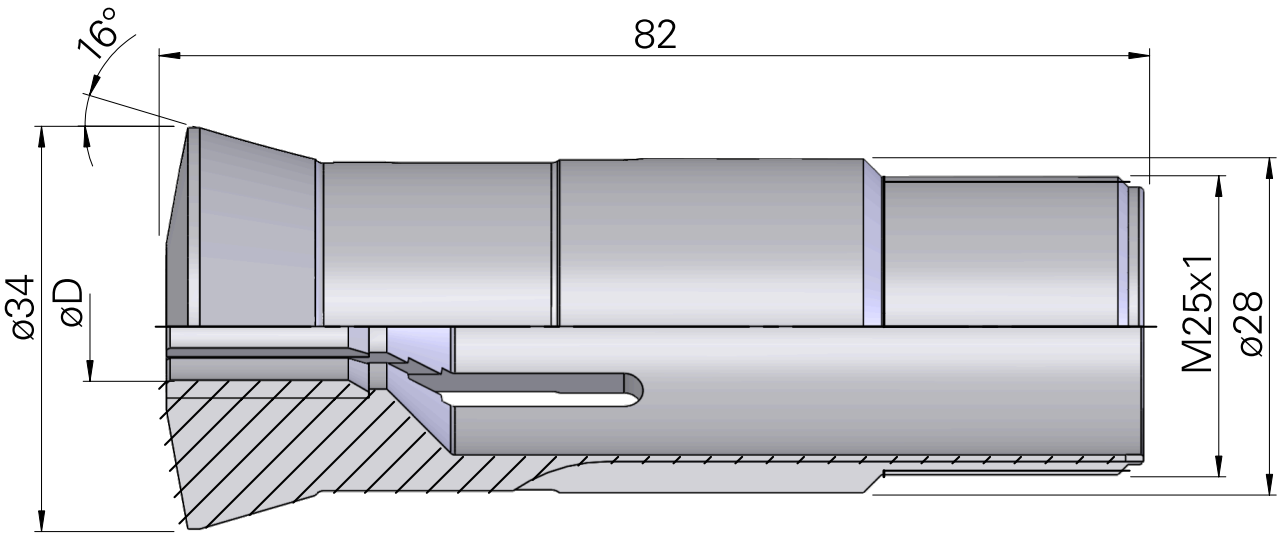

## Documents

No downloads available for this product