INDEX

Calibrating tool HSK 50 A

Technical data

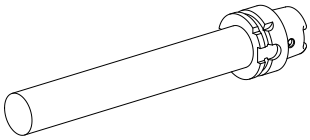

Shank HSK	HSK 50
Form HSK	A
X [mm]	346 (13.62")
INDEX TRAUB products	G250

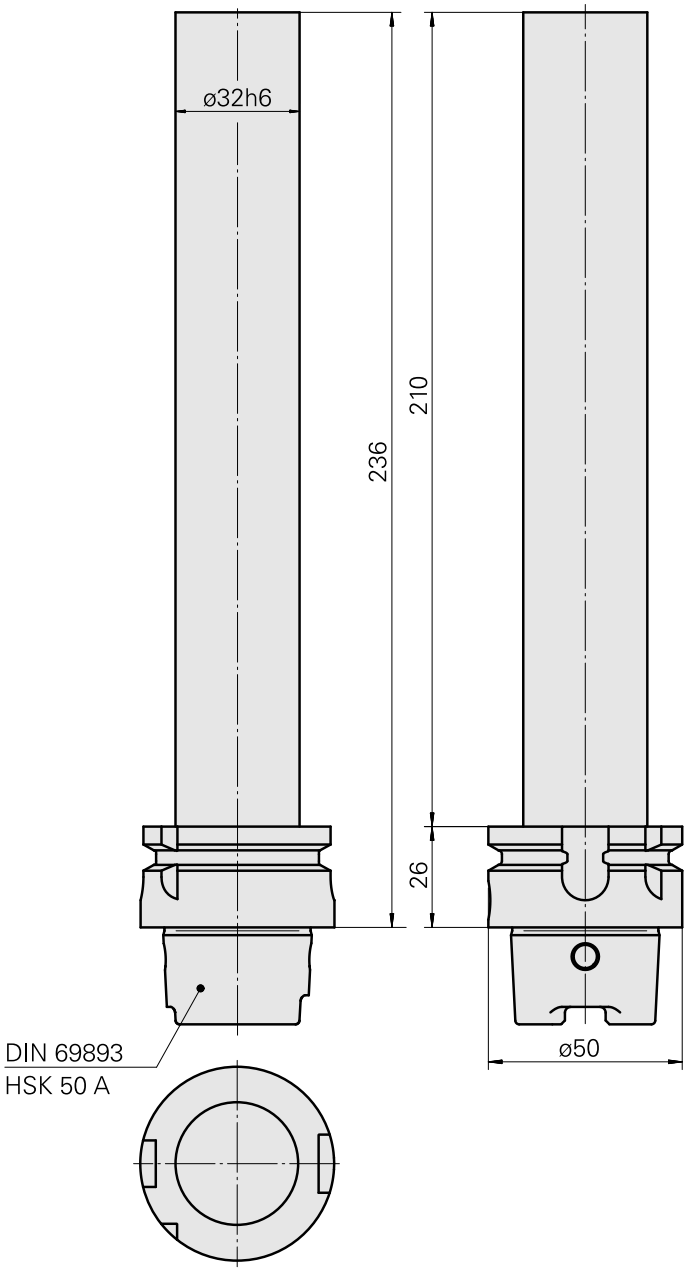

Documents

No downloads available for this product

Accessories

Optional accessories

Tool holder accessories

Coolant adapter kit

Product ID : 10851451
Previous product ID : WS7600.0020

TH accessories category	Mounting
Cooling lubricant transfer set	HSK 50 C