Drilling tool holder HSK 25 C ER11

Technical data

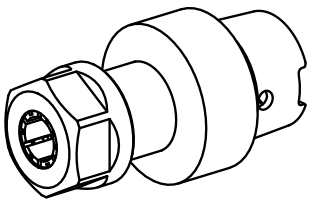

Shank HSK	HSK 25
Form HSK	C
Mounting	ER11
Cooling	internal
Pressure	40 bar
X [mm]	32.5 (1.28")
INDEX TRAUB products	MS22-6 • MS22-8 • MS16-6

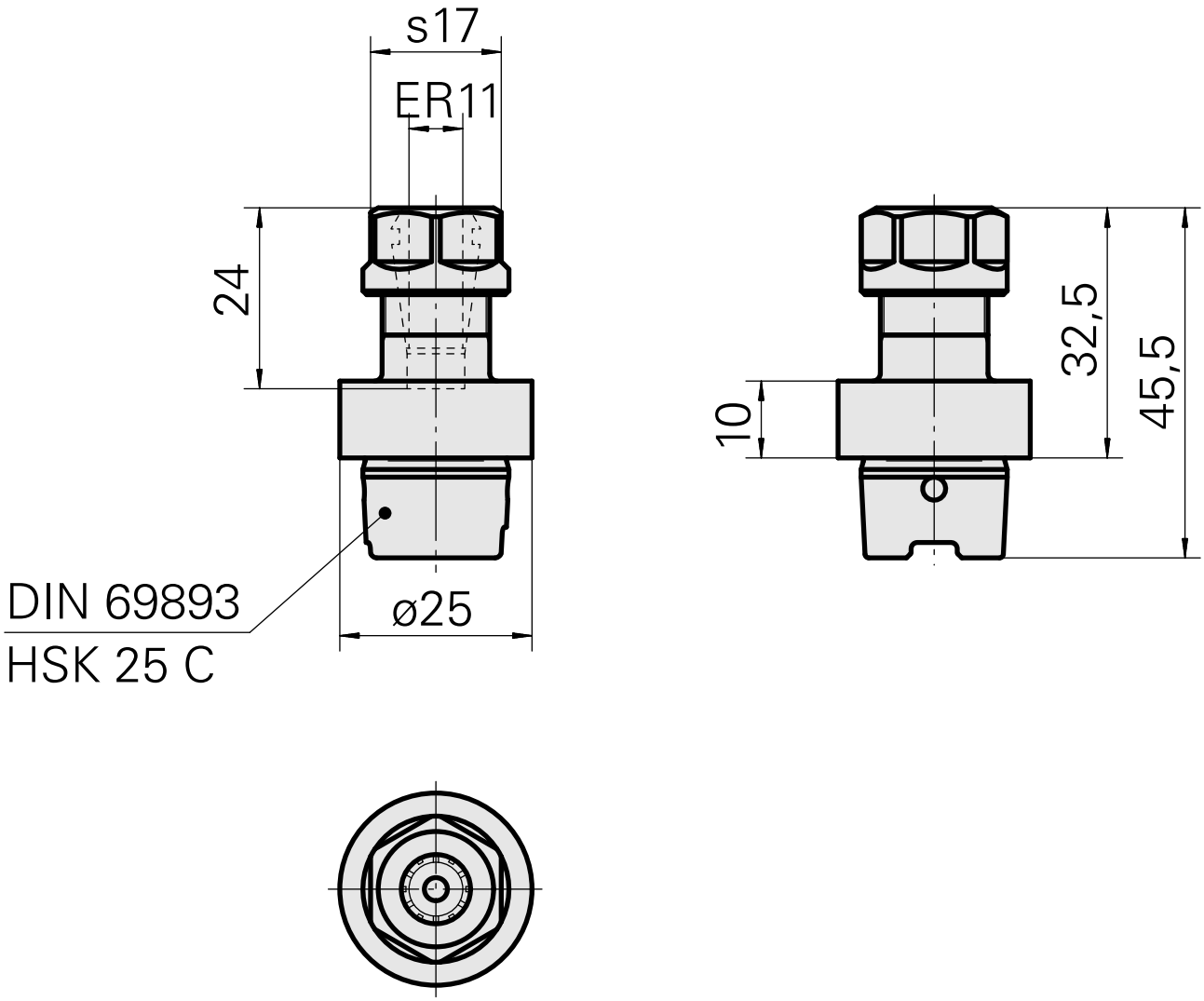

Documents

No downloads available for this product

Accessories

Required for operation

Spanner

Product ID : 10969996
Previous product ID : 490219.0111

TH accessories category	Mounting	Collet type	Clamping nut type
Tool	ER11	ER 11	Female thread

Tools for Collet chucks
Clamping nut wrench

Optional accessories

Tool holder accessories

Clamping nut

Product ID : 10302707
Previous product ID : 322438

TH accessories category	Mounting	Collet type	Clamping nut type
Clamping nut	ER11	ER 11	Female thread

Other accessories

Clamping collet

Product ID : 10086829
Previous product ID : 901930.0---

tapping tool collet ET-1-12

Product ID : 10001911
Previous product ID : 3239--

tapping tool collet ER11GB

Product ID : 10285407
Previous product ID : 900288

Collet chuck

Product ID : 10132309
Previous product ID : W999064-