WFB 32-20 for CC.. 09T3.., right, without gripper groove

Technical data

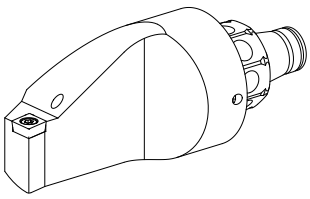

TH accessories category	WFB 32-20
Mounting	for CC.. 09T3..
Quick change inserts	Turning tool holder

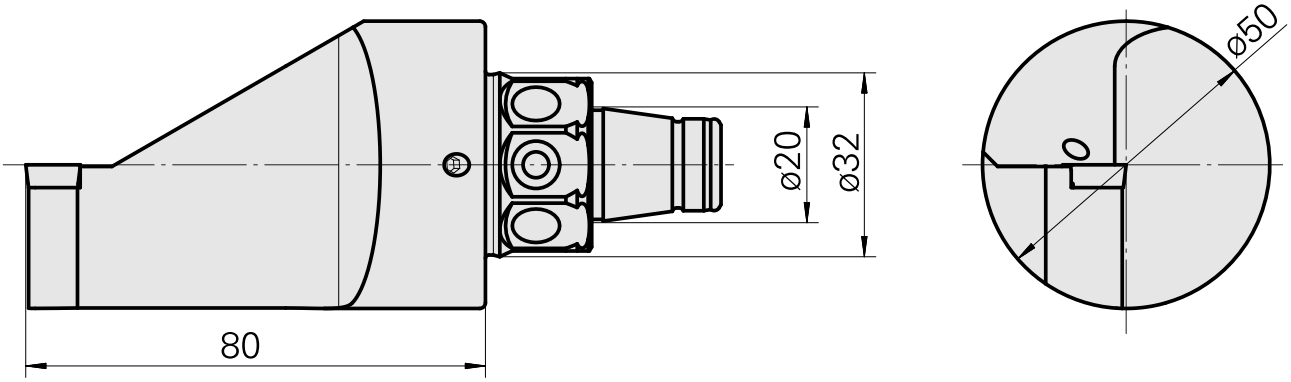

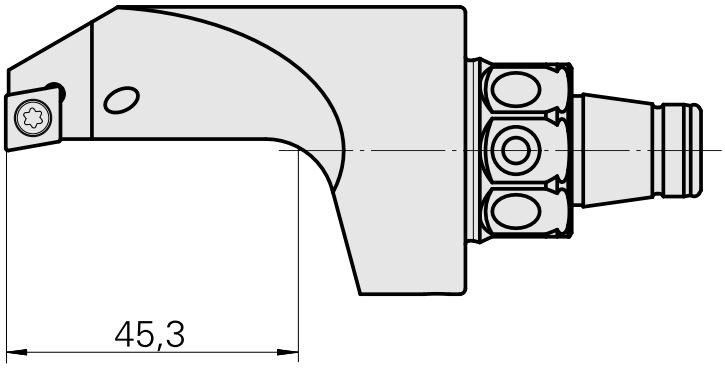

Documents

No downloads available for this product