Turning tool holder MS16/MS22 Square 16x

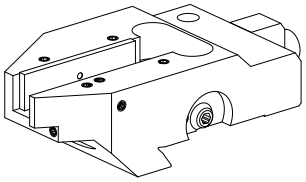

Technical data

Slide system MS	MS16/MS22
Drive	not live
Fixation MS	Dovetail
Cooling	external and internal
Pressure	80 bar
Direction	left-handed run
Mounting	Square 16x16
X [mm]	49.7 (1.96")
Y [mm]	–
Z [mm]	14.5 (0.57)
INDEX TRAUB products	A100 • MS16-6 • MS22-6 • MS22-8 • MS24-6 • MS24-8

Note

Stop plate is not included!

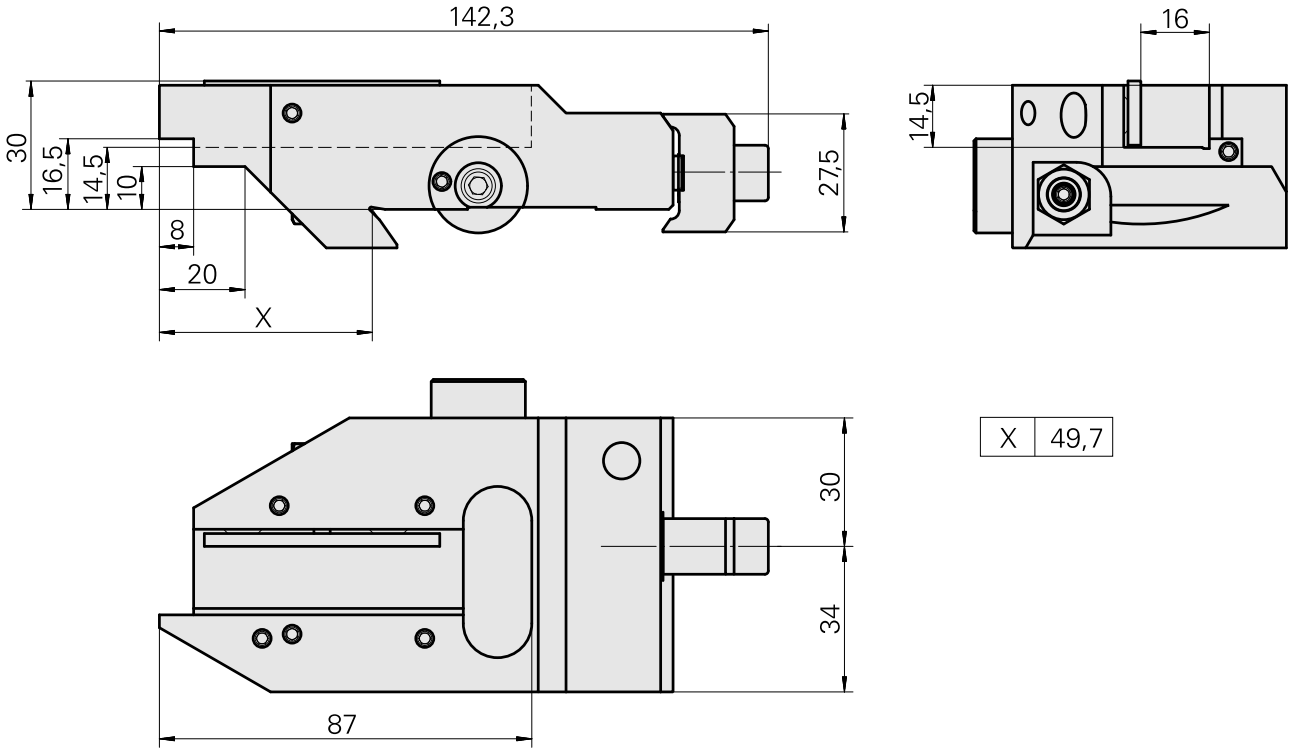

X	49,7

Documents

No downloads available for this product

Accessories

Required for operation

Hollow screw M12x1

Product ID : 10757766
Previous product ID : W02013.0001

Grub screw

Product ID : 10244712
Previous product ID : 410156.0505

Bush 4x8x12

Product ID : 10831938
Previous product ID : W02010.0002

Optional accessories

Tool holder accessories

Plate, height 4 mm (0.15")

Product ID : 12050311
Previous product ID :

TH accessories category	Mounting
Compensation plate	Square 16x16

Other accessories

Stop plate

Product ID : 12129240
Previous product ID :

Ball nozzle D8xM5

Product ID : 10392450
Previous product ID : W02019.0002