Presetting device D80/INDEX CAPTO C5

Technical data

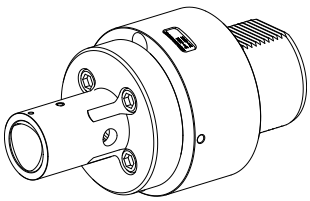

TH accessories category	Adapter for presetting units
Mounting	D80 for presetting devices
Tool mounting	CAPTO C5

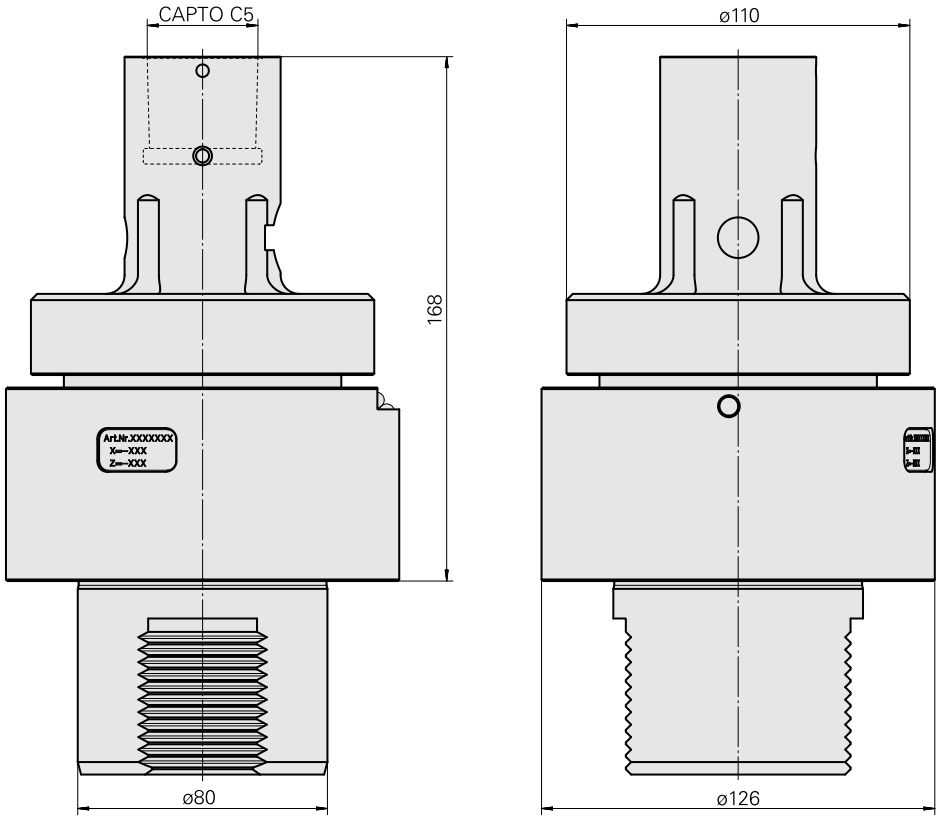

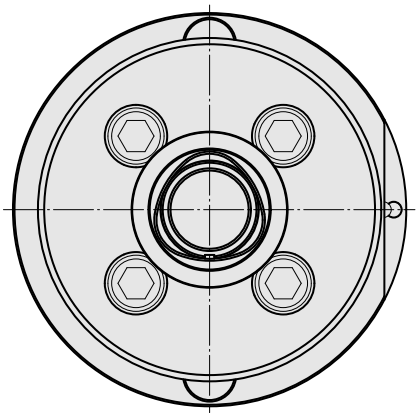

Documents

No downloads available for this product