Chuck

Technical data

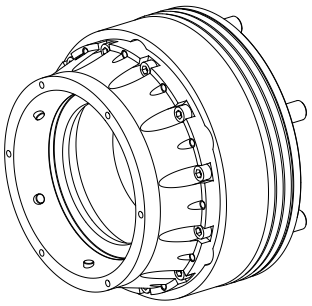

INDEX TRAUB products	G420 • G400.2 • G500 • G520
Spindle clearance	120mm
Machining side	Main spindle • Counter spindle
Ext. manufact. product feature	Modular
manufacturer product line	SPANNTOP nova chuck
Spindle mounting	KK11
Clamping device size	125
manufacturer product line	Hainbuch

No 3-side view is currently available for this product

Documents

No downloads available for this product