INDEX

Grooving tool holding block Square 16x16, adjustable in Y direction

Technical data

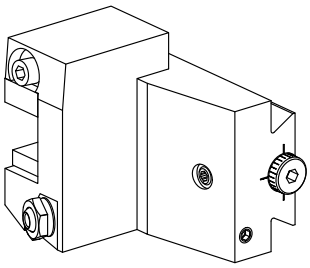

Drive	not live
Cooling	external
Pressure	80 bar
Direction	right-handed run
Mounting	Square 16x16
X [mm]	59.5 (2.34")
Y [mm]	–
Z [mm]	52 (2.05)

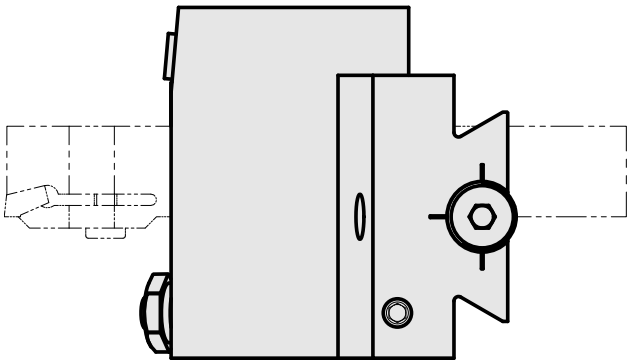

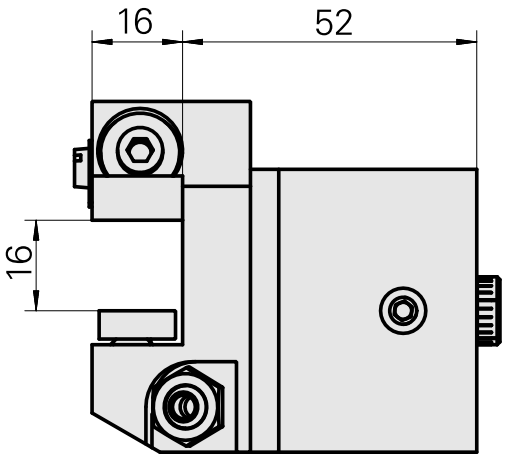

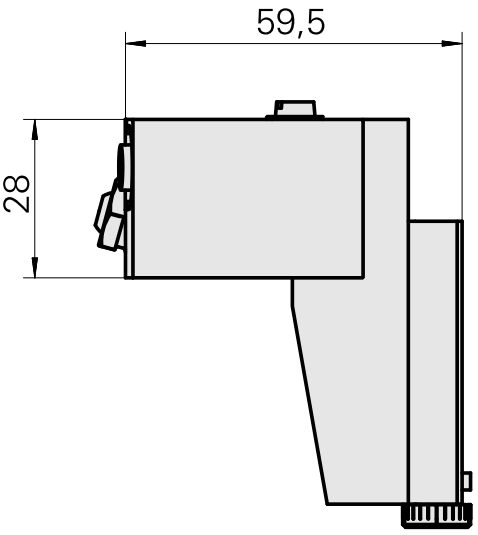

Documents

No downloads available for this product

Accessories

Optional accessories

Other accessories

Nozzle Kugel-D8

Product ID : 10007891
Previous product ID : 904837

Bush 4x8x12

Product ID : 10831938
Previous product ID : W02010.0002

Adjusting screw M6x0,25

Product ID : 10287476
Previous product ID : W00011.0012

Hollow screw M12x1

Product ID : 10757766
Previous product ID : W02013.0001

Ball nozzle D8xM5

Product ID : 10392450
Previous product ID : W02019.0002