Insert, for 2 knurling wheels

Technical data

TH accessories category	Knurling tool holder
Mounting	Square 20x20

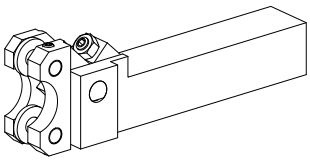

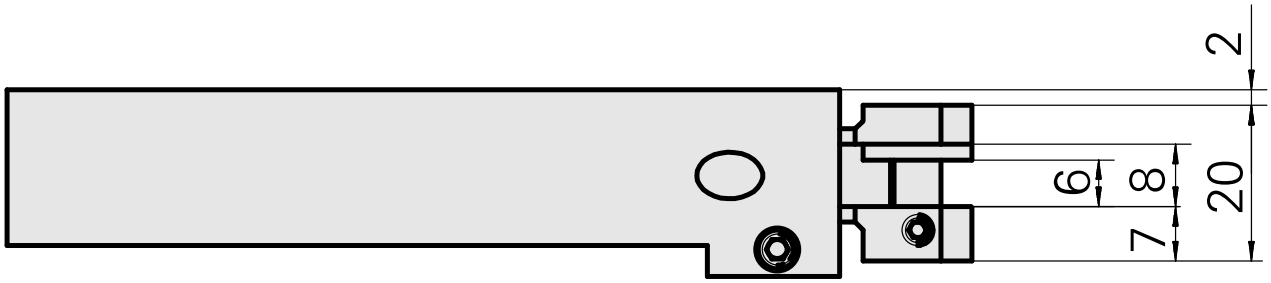

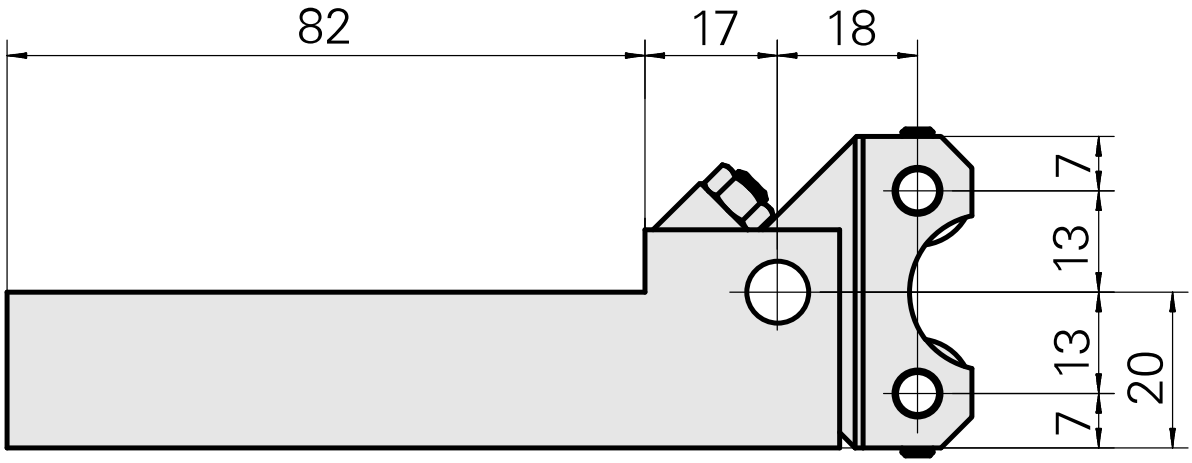

Documents

No downloads available for this product

Accessories

Optional accessories

Other accessories

Knurl

Product ID : 10398067
Previous product ID : 22191-.21--