INDEX

Adaptor

Technical data

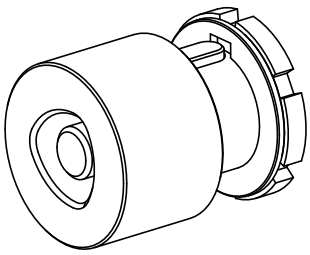

TH accessories category	Adapters INDEX CAPTO C3
Mounting	Milling shaft D32

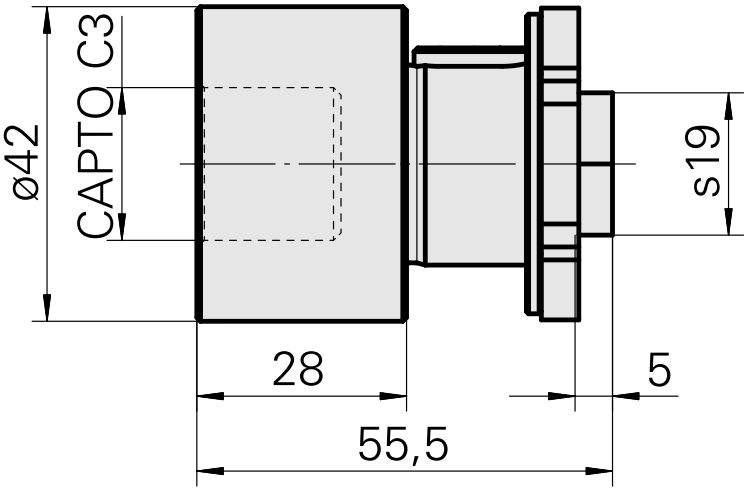

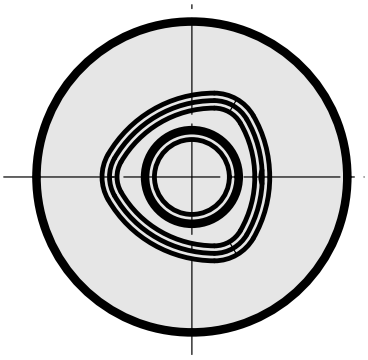

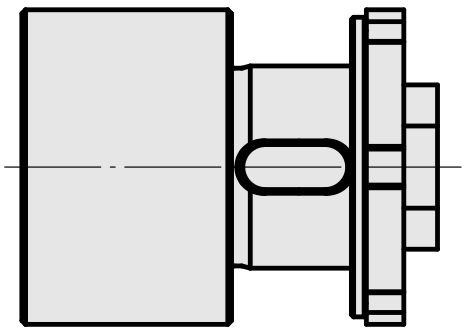

Documents

No downloads available for this product