Saw blade, circular saw blade width 3 mm (0.11")

Technical data

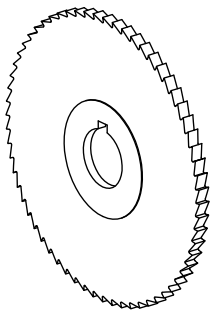

TH accessories category	Circular saw blade d80
Tool mounting	16mm

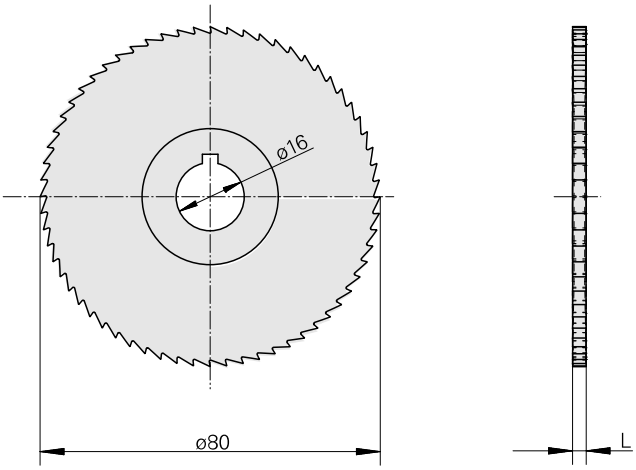

Documents

No downloads available for this product