INDEX

Blanking plug

Technical data

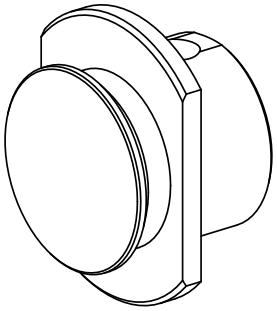

Drive	not live
Fixation MS	Shank D42
X [mm]	16 (0.63")
Y [mm]	–
Z [mm]	–
INDEX TRAUB products	MS52C • A200-6 • MS52-6.3

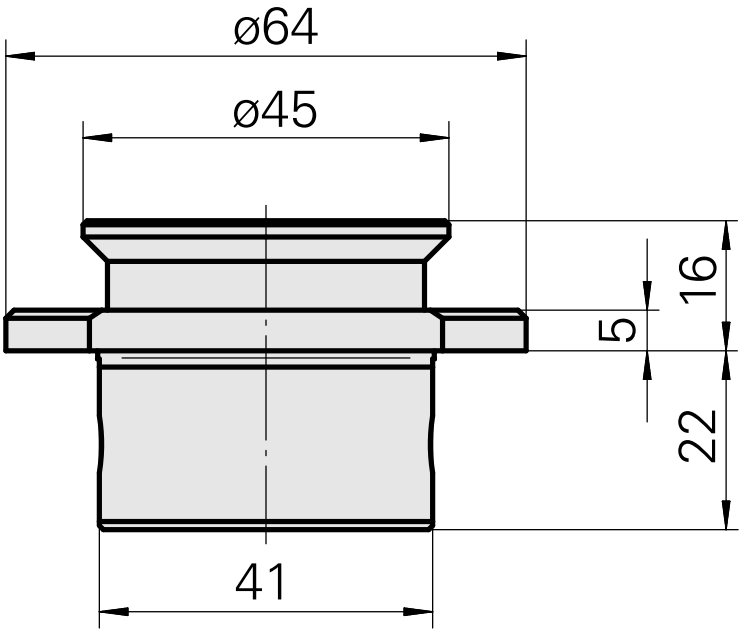

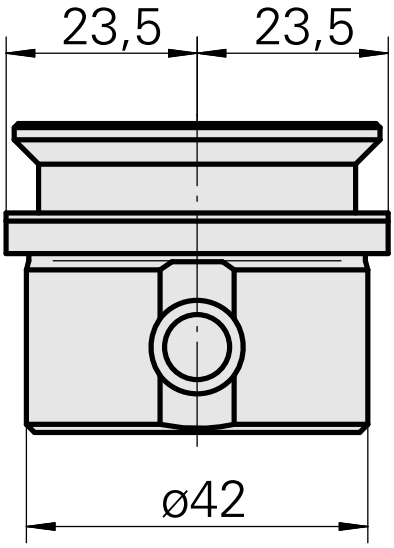

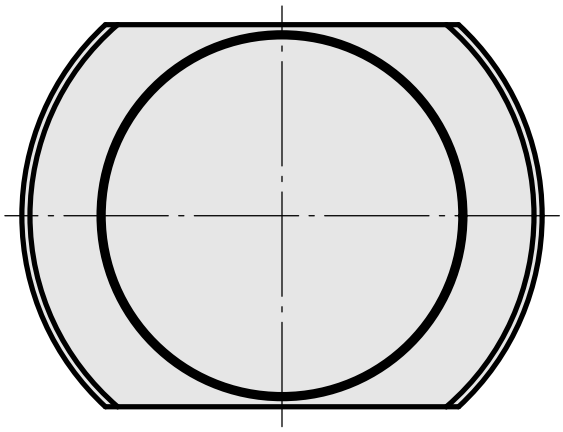

INDEX

Documents

No downloads available for this product