INDEX

Adaptor

Technical data

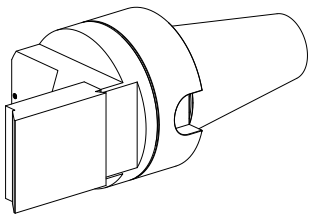

TH accessories category	Adapter for presetting units
Mounting	SK50
Tool mounting	MS16/MS22 Cross slide

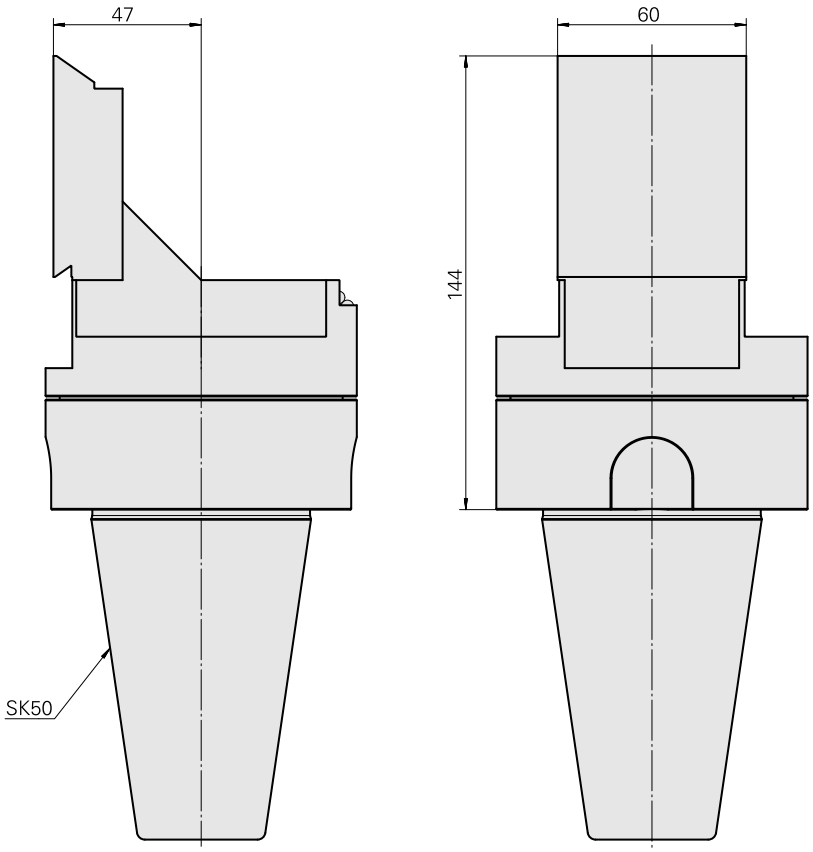

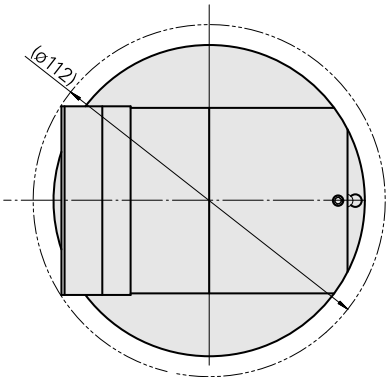

Documents

No downloads available for this product