10760675
984499

INDEX

车刀架 圆棱镜 四方头 16x16

Technical data

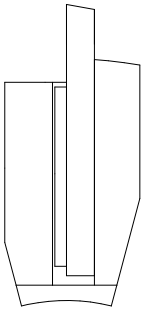

Shank TNL	Circular prism
Drive	not live
Fixation TNL	Central tensioning screw
Cooling	external
Pressure	30 bar
Mounting	Square 16x16
INDEX TRAUB products	TNK36 • TNL26

Note

Can only be used on the counter spindle running clockwise!

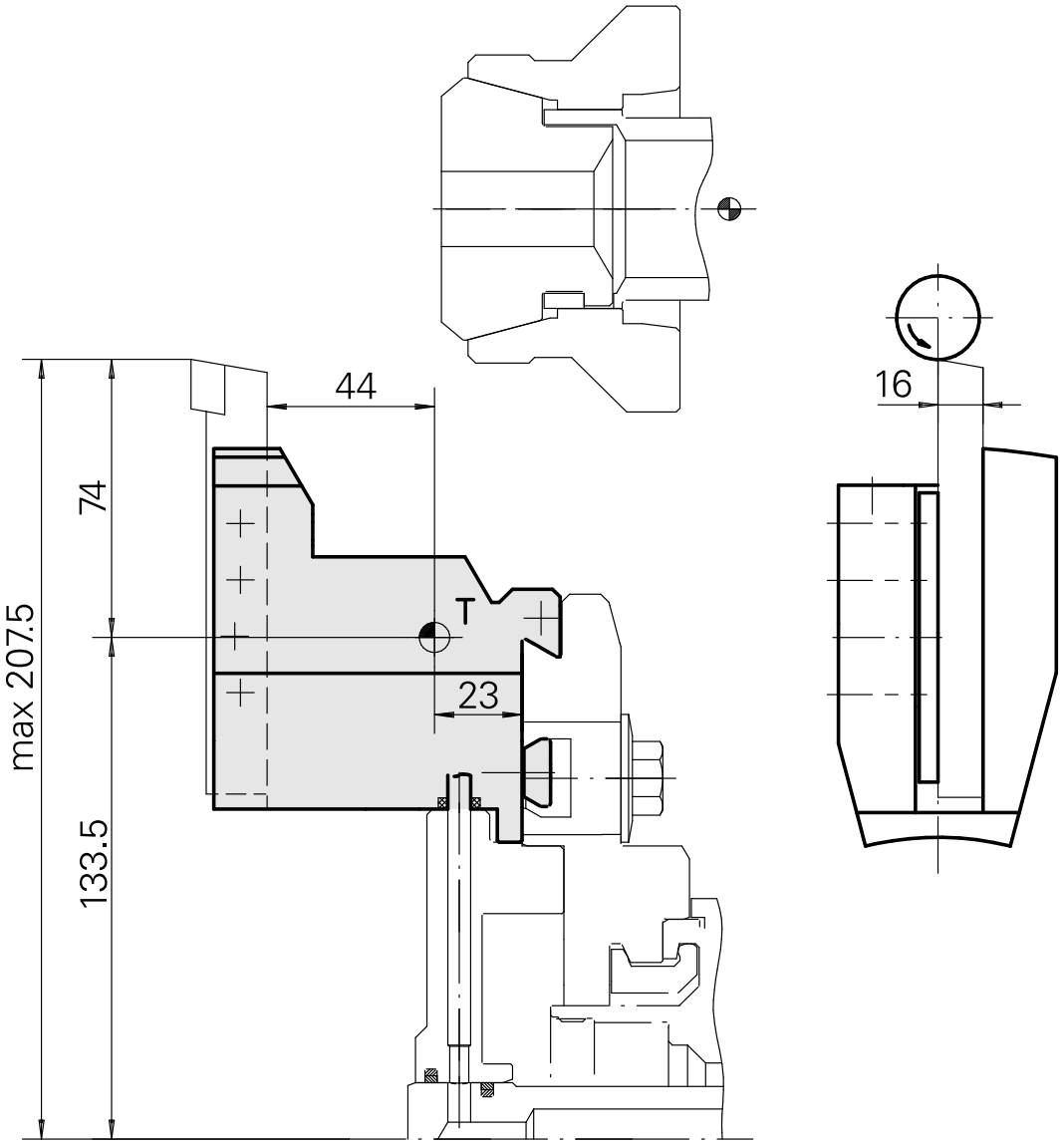
44
16
74
max 207.5
133.5
T
23

INDEX

Documents

No downloads available for this product