INDEX

Mounting sleeve with collar D12/ 5mm

Technical data

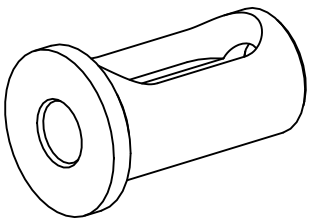

TH accessories category	Mounting sleeve with collar
Mounting	D12
Tool mounting	5mm

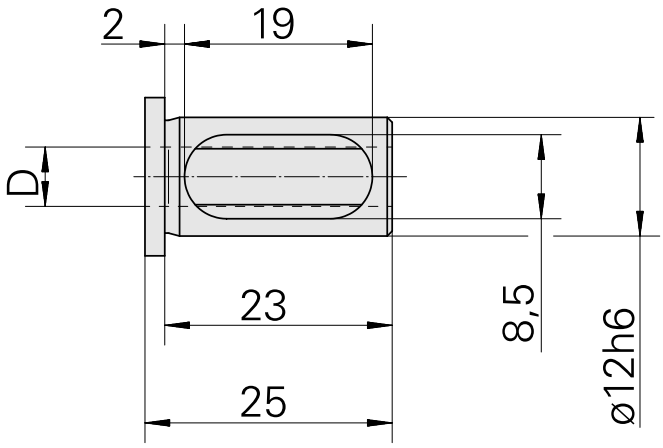

Documents

No downloads available for this product