INDEX

Guide bush T223 Ø=17,00

Technical data

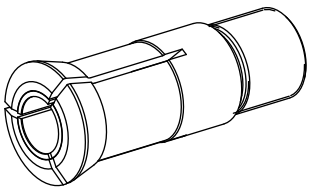

Clamping device size	T223
manufacturer product line	
Clamping type	with carbide insert
Nominal diameter (mm)	17 Millimeter
Clamping method	External clamping
Collet design	adjustable
Collet version	Slots vulcanized (standard)
manufacturer product line	Schlenker

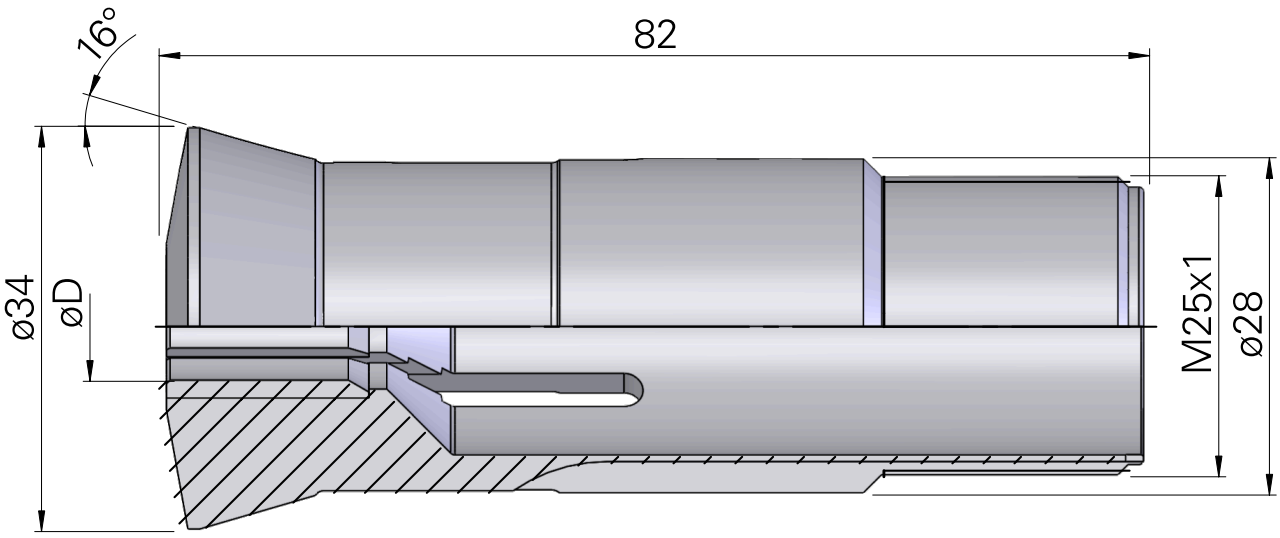

Documents

No downloads available for this product