INDEX

# Mount D25

## Technical data

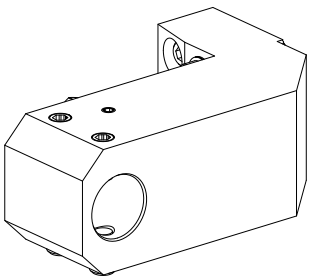

| | |
|---|---|
| **Drive** | not live |
| **Cooling** | external |
| **Pressure** | 80 bar |
| **Mounting** | D25 |
| **X [mm]** | 112.6 (4.43") |
| **Y [mm]** | – |
| **Z [mm]** | – |
| **INDEX TRAUB products** | MS16-6 • MS16-6 Plus |

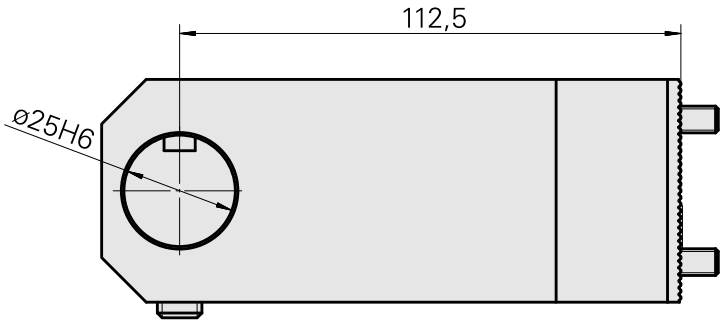


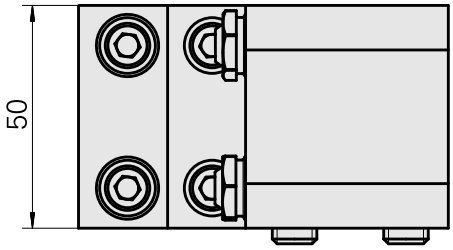


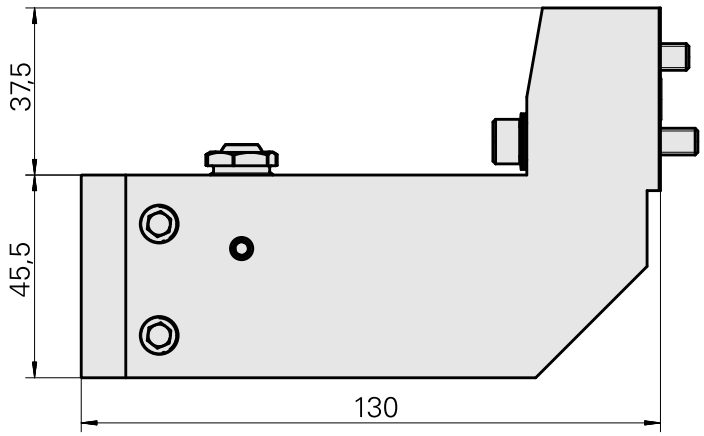

## Documents

No downloads available for this product

## Accessories

### Optional accessories

**Other accessories**

Mounting sleeve with collar D25

Product ID : 10070544
Previous product ID : W62221.41--