INDEX

Adaptor D80/MS40P Direktaufnahme

Technical data

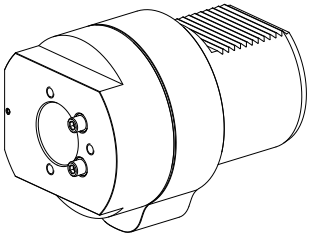

TH accessories category	Adapter for presetting units
Mounting	D80 for presetting devices
Tool mounting	Direct mounting MS40P

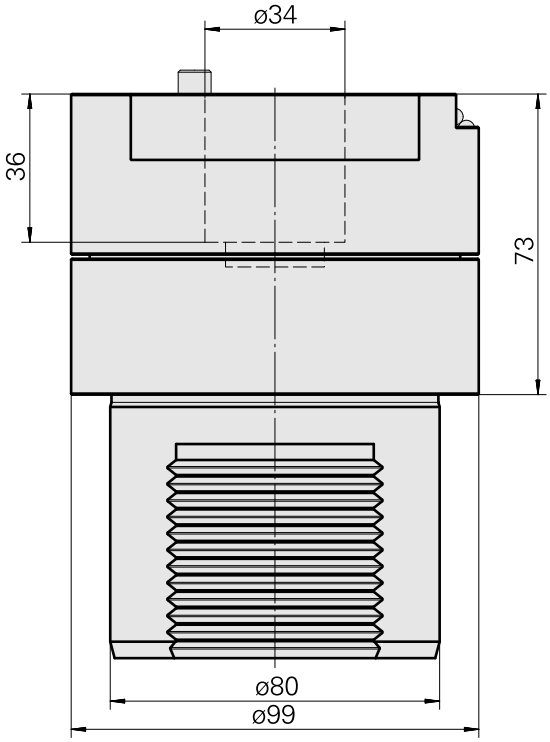

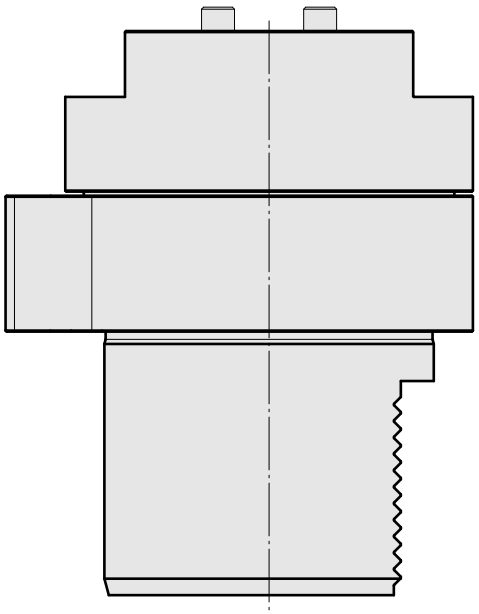

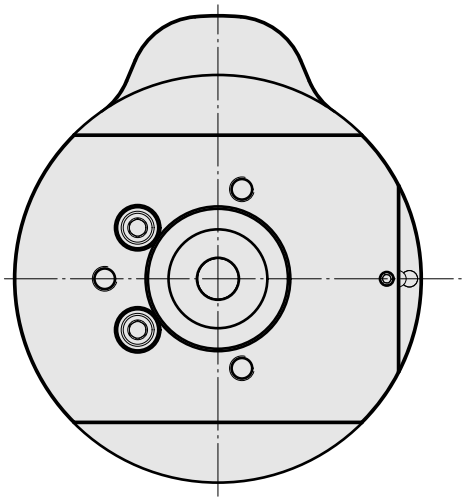

INDEX

Documents

No downloads available for this product