INDEX

Clamping collet 1212E/F16 Ø=13,00

Technical data

There are currently no additional technical features stored for this product

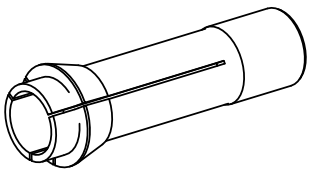

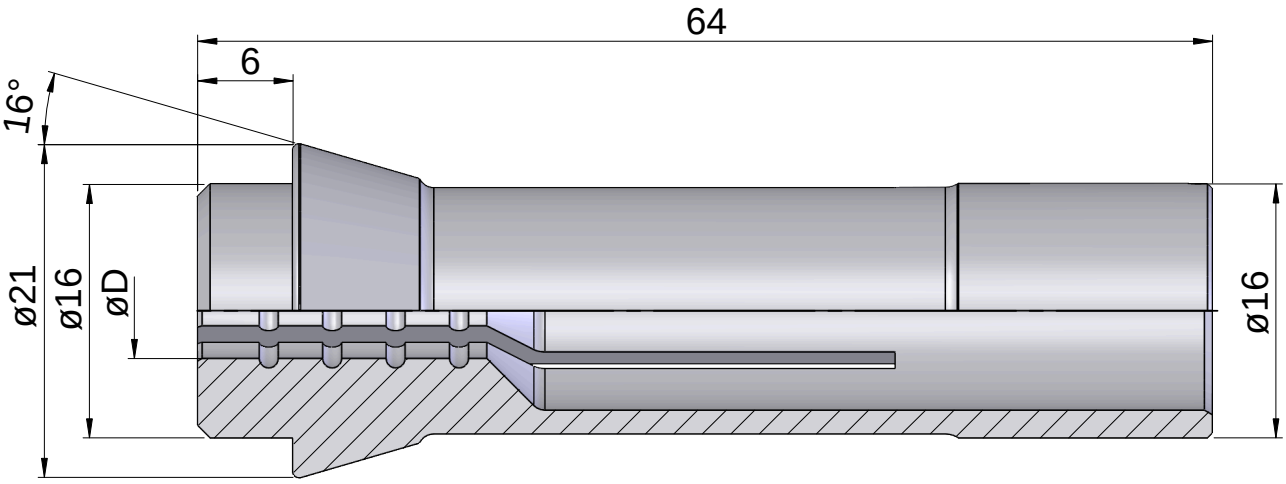

Documents

No downloads available for this product