INDEX

Pièce support plong/fonçage Trapèze 26x4

Technical data

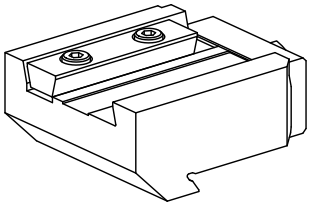

Drive	not live
Direction	left-handed run
Mounting	Trapezoid 26x4
X [mm]	55 (2.17")
Y [mm]	–
Z [mm]	21 (0.83)
INDEX TRAUB products	MS16-6 • MS16-6 Plus

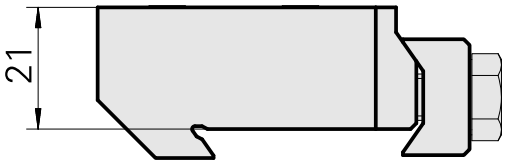

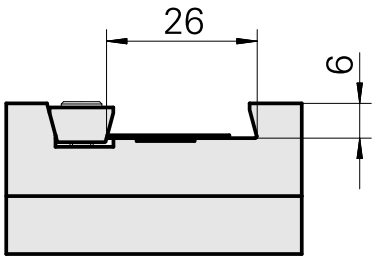

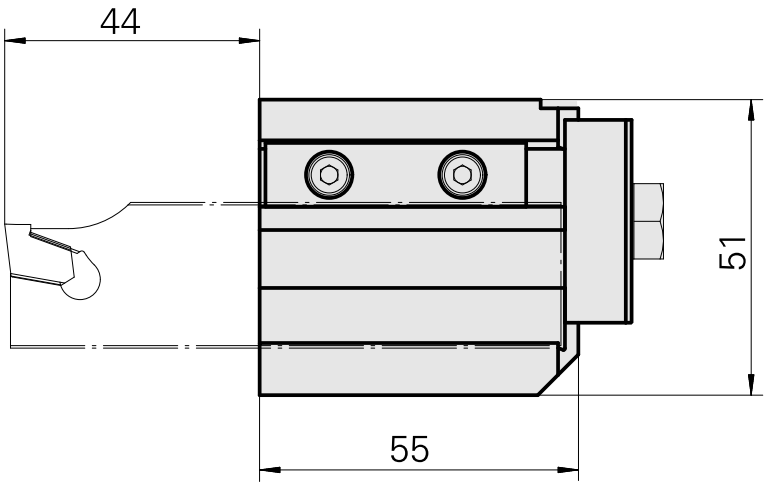

Documents

No downloads available for this product